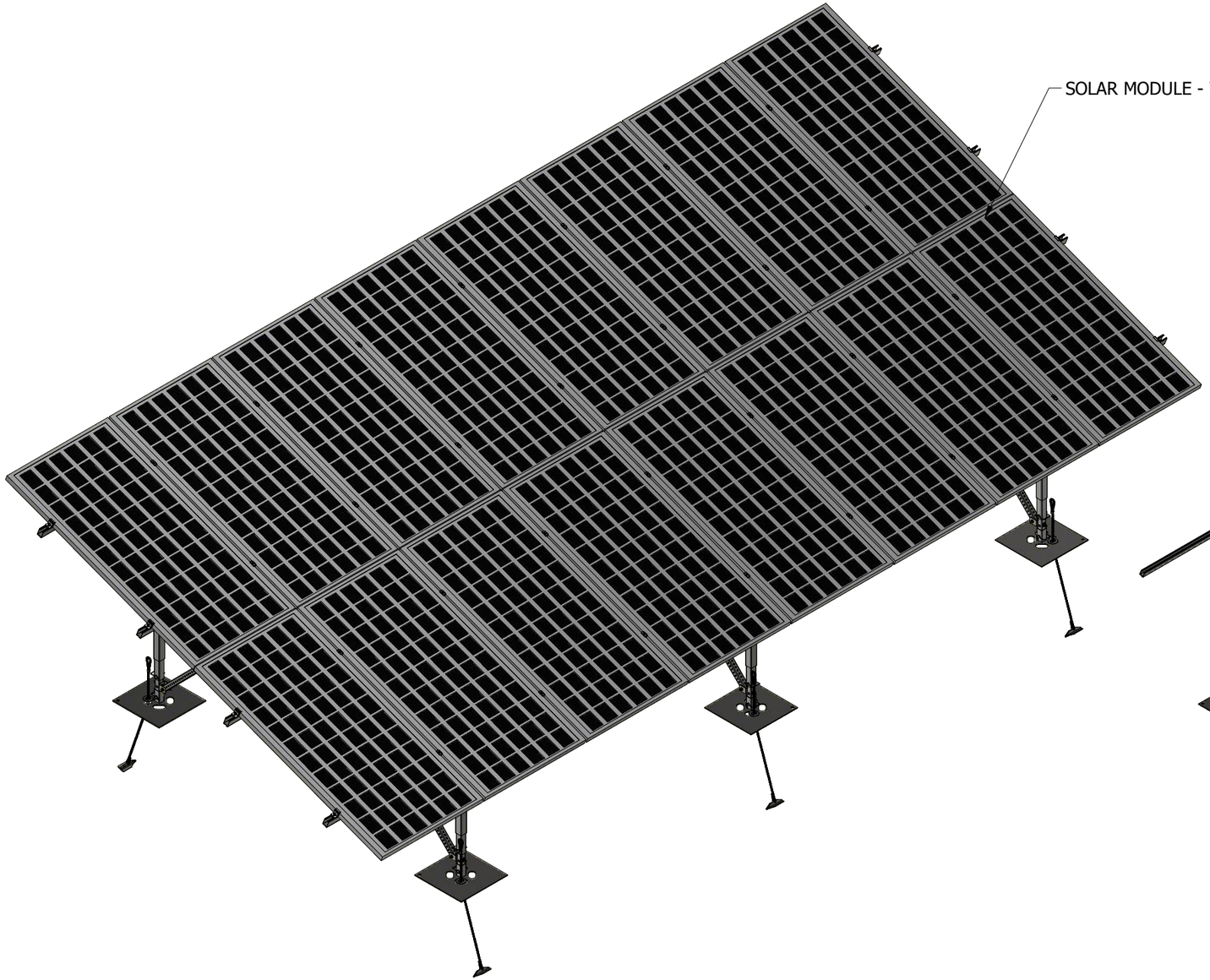

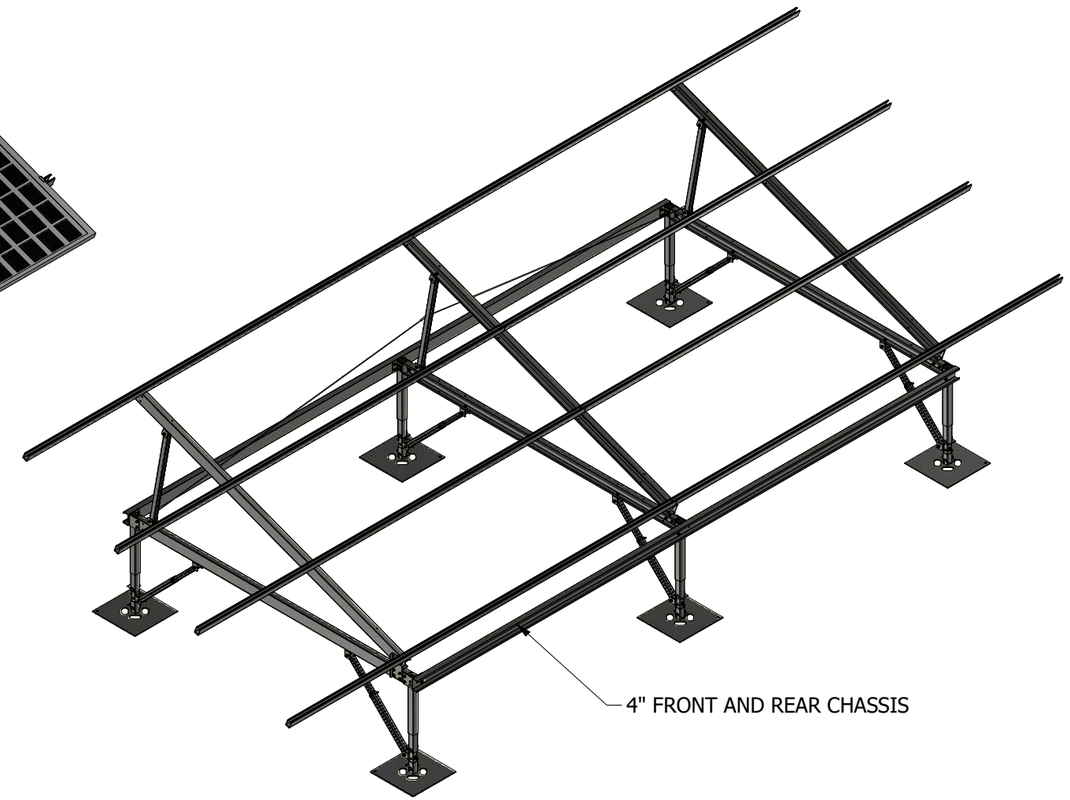

STAMP & SIGNATURE:

ENGINEERED POWER SOLUTIONS
1405 Spring Street, Suite 204
Paso Robles, CA 93446

FOR STRUCTURAL ELEMENTS ONLY

OSPREY POWERPLATFORM

NUANCE ENERGY
Revolutionary Solar Racking Structures

PROPRIETARY AND CONFIDENTIAL: THE INFORMATION CONTAINED HERE IN IS THE SOLE PROPERTY OF NUANCE ENERGY GROUP. INC. ANY REPRODUCTION IN PART OR WHOLE WITHOUT WRITTEN PERMISSIONIS PROHIBITED. (C) COPYRIGHT 2013. ALL RIGHTS RESERVED.

MACHINED FILLET RADII 0.38-1.27 [.015-.050]. BREAK ALL SHARP EDGES 0.2-0.8 [.01-.03] RADII OR 45°. SURFACE FINISH IN MICRO (P) INCHES (Ra). INTERPRET DRAWING PER ASME Y14.5, ASME Y14.36, AND AWS A2.4 STANDARDS.

DRAW: RODOLFO PEREIRA	03/26/2020	OSPREY POWERPLATFORM
APPROVED: LUKE ASHWORTH	03/26/2020	TITLE: Osprey PowerPlatform Portrait 2x8, Strut - 72 Cell - HD
WEIGHT: N/A lb		MATERIAL: N/A
GENERAL TOLERANCES: DECIMALS .X ± .1, .XX ± .01, .XXX ± .005; ANGULAR ∠ ± 1°		SIZE B; DWG NO OSP-STRUT-72CELL-2X8 - HD; REV 02
		SCALE 1:35; SHEET 1 OF 10

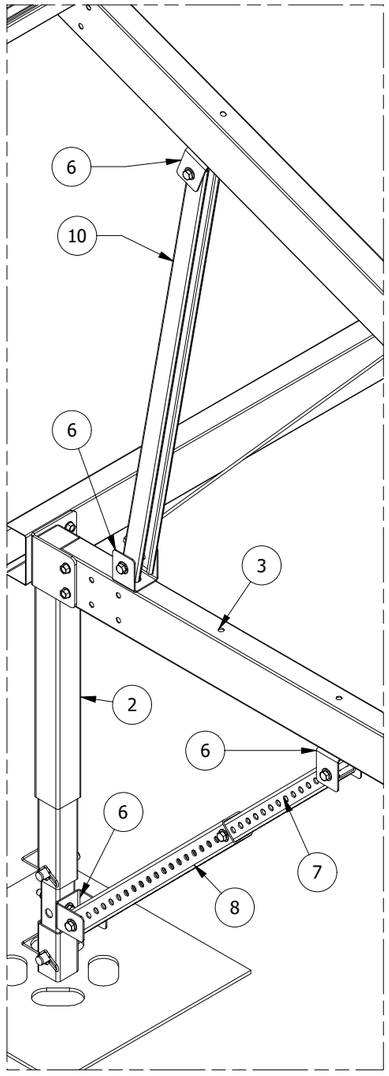

DETAIL A (3x)
SCALE 1:10

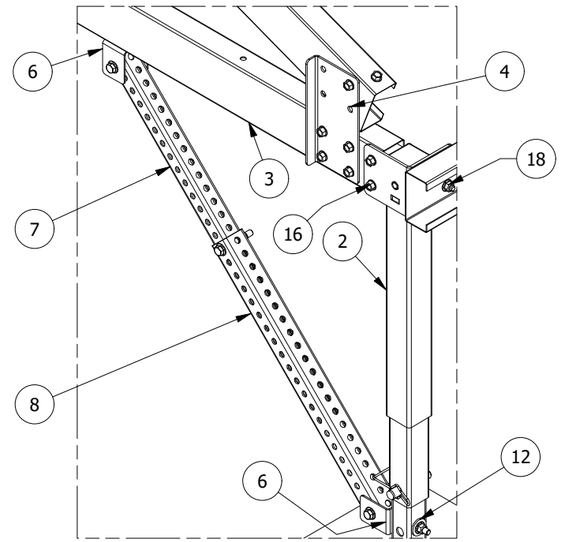

DETAIL B (3x)
SCALE 1:10

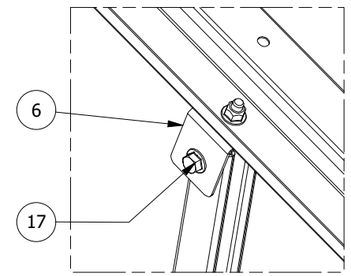

DETAIL C
SCALE 1:5

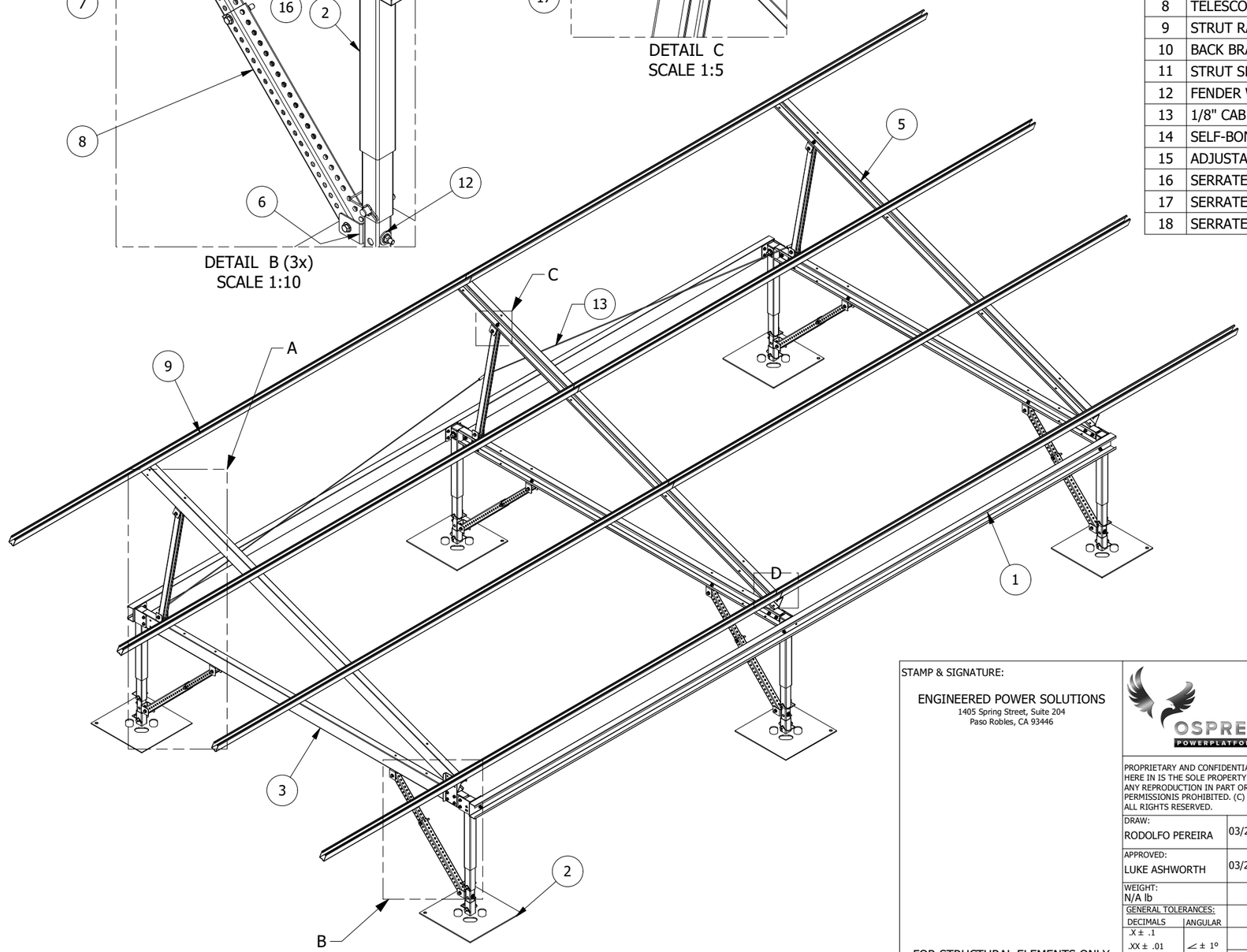

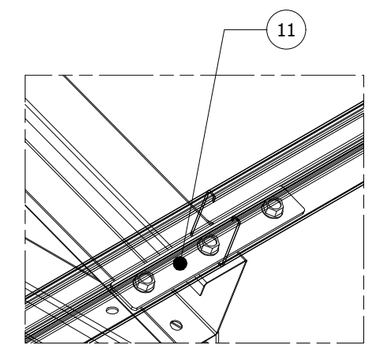

DETAIL D
SCALE 1:5

PARTS LIST

ITEM	DESCRIPTION	QTY
1	FRONT AND REAR CHASSIS - 2x8 HD - G80	2
2	POWER ADJUSTABLE LEG	6
3	CHASSIS STUD - USA 72 CELL HD	3
4	RACK MOUNTING BRACKET - 4 HOLE	3
5	STRONG BACK 72 CELL HD - G80	3
6	BACK BRACE BRACKET	18
7	TELESCOPIC TUBING 1.50 x 1.50	6
8	TELESCOPIC TUBING 1.75 x 1.75	6
9	STRUT RAIL 2x8 HD XHD 1.63 x 2.44 14GA 80KSI	8
10	BACK BRACE - AS DRAWING 402-009	3
11	STRUT SPLICE PLATE	4
12	FENDER WASHER	6
13	1/8" CABLE BRACE AS DRAWING	2
14	SELF-BONDING MID CLAMP	28
15	ADJUSTABLE END CLAMP	8
16	SERRATED FLANGE BOLT - 3/8"-16 x 1" - [514-008-01]	74
17	SERRATED FLANGE BOLT 3/8"-16 x 2.5" - [514-007-01]	30
18	SERRATED FLANGE NUT -3/8"-16 [514-006-01]	104

STAMP & SIGNATURE:

ENGINEERED POWER SOLUTIONS
1405 Spring Street, Suite 204
Paso Robles, CA 93446

FOR STRUCTURAL ELEMENTS ONLY

OSPREY POWERPLATFORM

NUANCE ENERGY
Revolutionary Solar Racking Structures

PROPRIETARY AND CONFIDENTIAL: THE INFORMATION CONTAINED HERE IN IS THE SOLE PROPERTY OF NUANCE ENERGY GROUP. INC. ANY REPRODUCTION IN PART OR WHOLE WITHOUT WRITTEN PERMISSIONIS PROHIBITED. (C) COPYRIGHT 2013. ALL RIGHTS RESERVED.

MACHINED FILLET RADII 0.38-1.27 [.015-.050]. BREAK ALL SHARP EDGES 0.2-0.8 [.01-.03] RADII OR 45°. SURFACE FINISH IN MICRO (P) INCHES (Ra). INTERPRET DRAWING PER ASME Y14.5, ASME Y14.36, AND AWS A2.4 STANDARDS.

DRAW: RODOLFO PEREIRA	03/26/2020	OSPREY POWERPLATFORM
APPROVED: LUKE ASHWORTH	03/26/2020	TITLE: Osprey PowerPlatform Portrait 2x8, Strut - 72 Cell - HD
WEIGHT: N/A lb		MATERIAL: N/A
GENERAL TOLERANCES: DECIMALS .X ± .1, .XX ± .01, .XXX ± .005; ANGULAR ∠ ± 1°		SIZE B; DWG NO OSP-STRUT-72CELL-2X8 - HD; REV 02
		SCALE 1:30; SHEET 2 OF 10

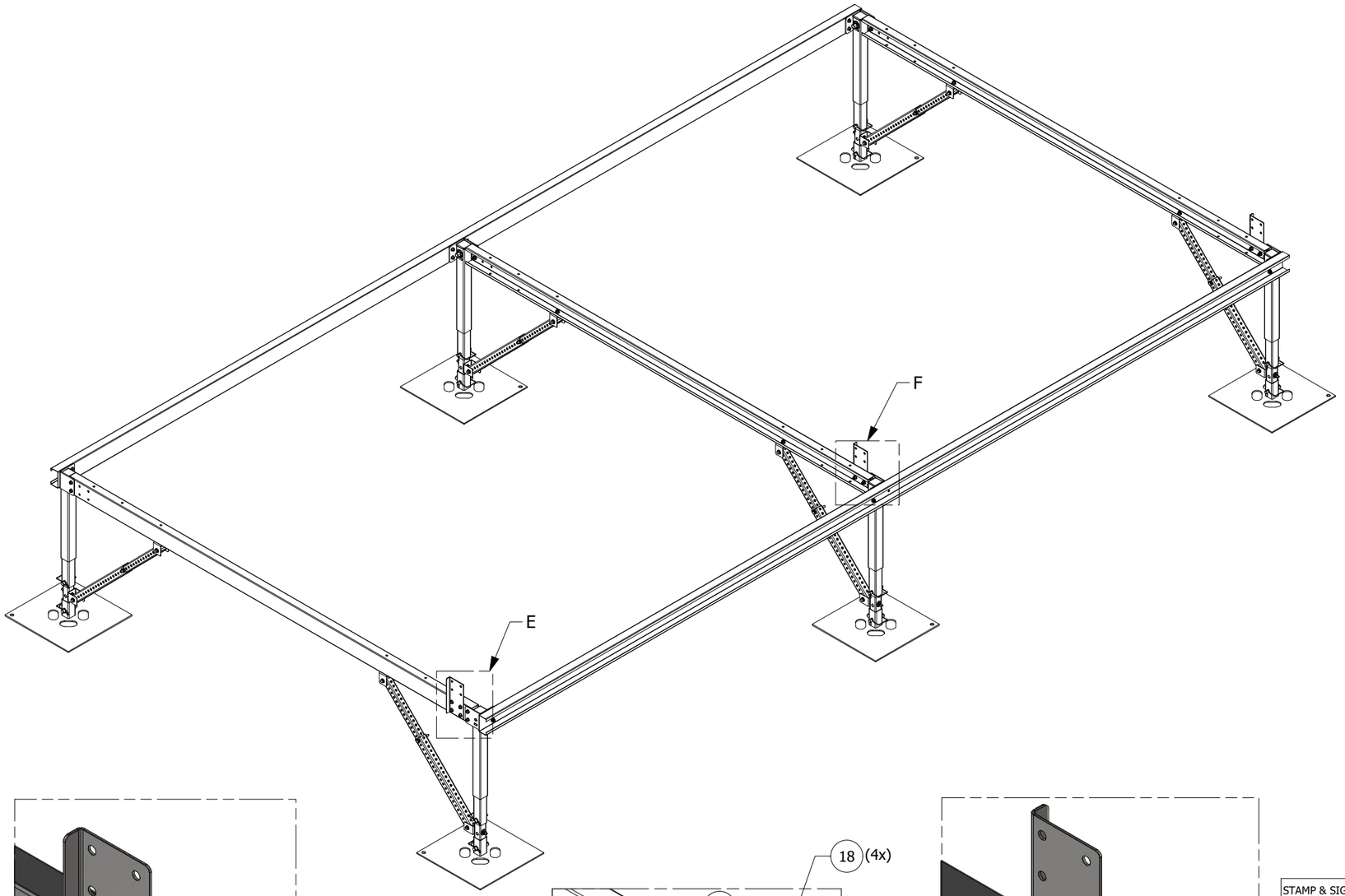

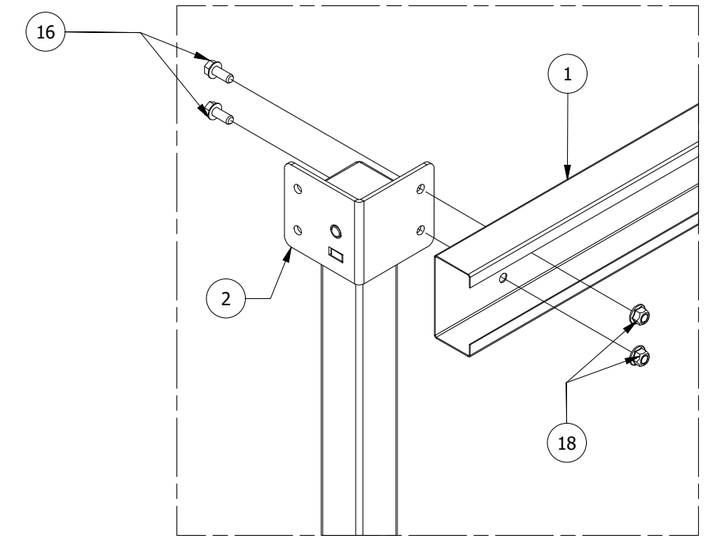

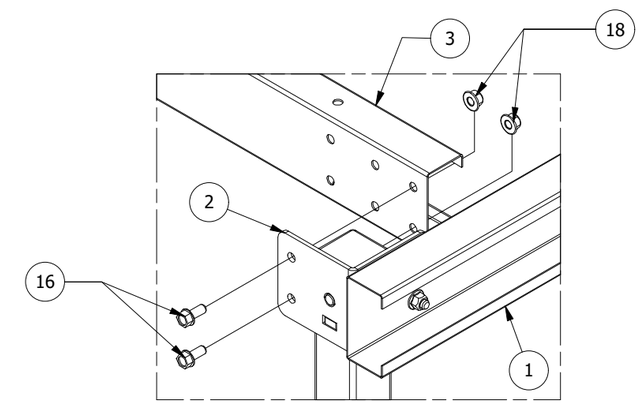

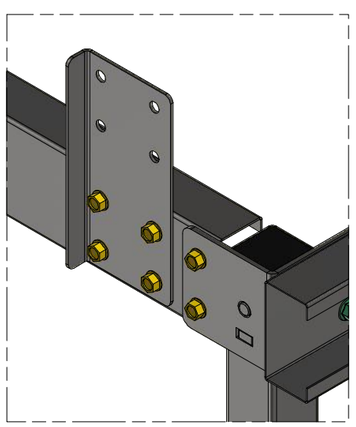

DETAIL E
SCALE 1:5

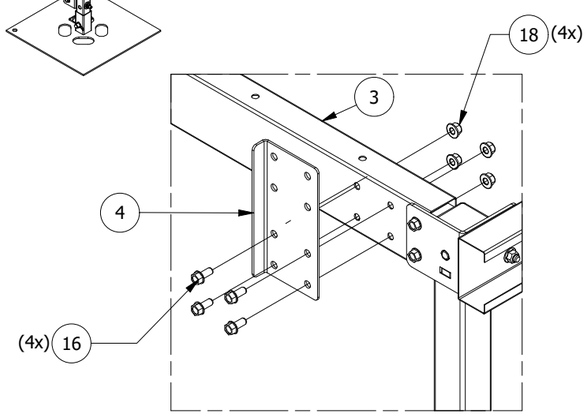

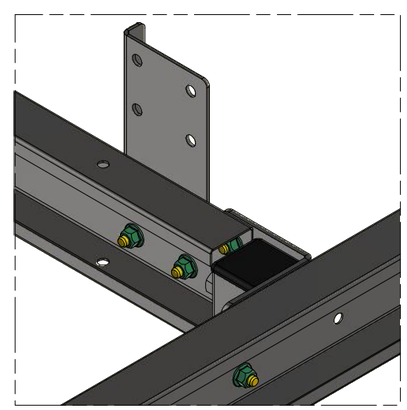

DETAIL F
SCALE 1:5

STAMP & SIGNATURE:

ENGINEERED POWER SOLUTIONS
1405 Spring Street, Suite 204
Paso Robles, CA 93446

FOR STRUCTURAL ELEMENTS ONLY

OSPREY POWERPLATFORM

NUANCE ENERGY
Revolutionary Solar Racking Structures

PROPRIETARY AND CONFIDENTIAL: THE INFORMATION CONTAINED HERE IN IS THE SOLE PROPERTY OF NUANCE ENERGY GROUP. INC. ANY REPRODUCTION IN PART OR WHOLE WITHOUT WRITTEN PERMISSIONIS PROHIBITED. (C) COPYRIGHT 2013. ALL RIGHTS RESERVED.

MACHINED FILLET RADII 0.38-1.27 [.015-.050]. BREAK ALL SHARP EDGES 0.2-0.8 [.01-.03] RADII OR 45°. SURFACE FINISH IN MICRO (P) INCHES (Ra). INTERPRET DRAWING PER ASME Y14.5, ASME Y14.36, AND AWS A2.4 STANDARDS.

DRAW: RODOLFO PEREIRA	03/26/2020	OSPREY POWERPLATFORM
APPROVED: LUKE ASHWORTH	03/26/2020	TITLE: Osprey PowerPlatform Portrait 2x8, Strut - 72 Cell - HD
WEIGHT: N/A lb		MATERIAL: N/A
GENERAL TOLERANCES: DECIMALS .X ± .1, .XX ± .01, .XXX ± .005; ANGULAR ∠ ± 1°		SIZE B; DWG NO OSP-STRUT-72CELL-2X8 - HD; REV 02
		SCALE 1:25; SHEET 3 OF 10

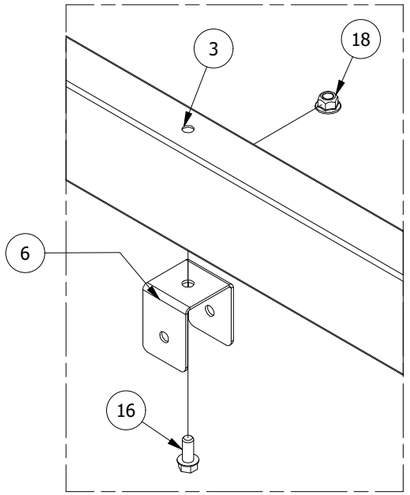

(6x) ON CHASSIS STUD

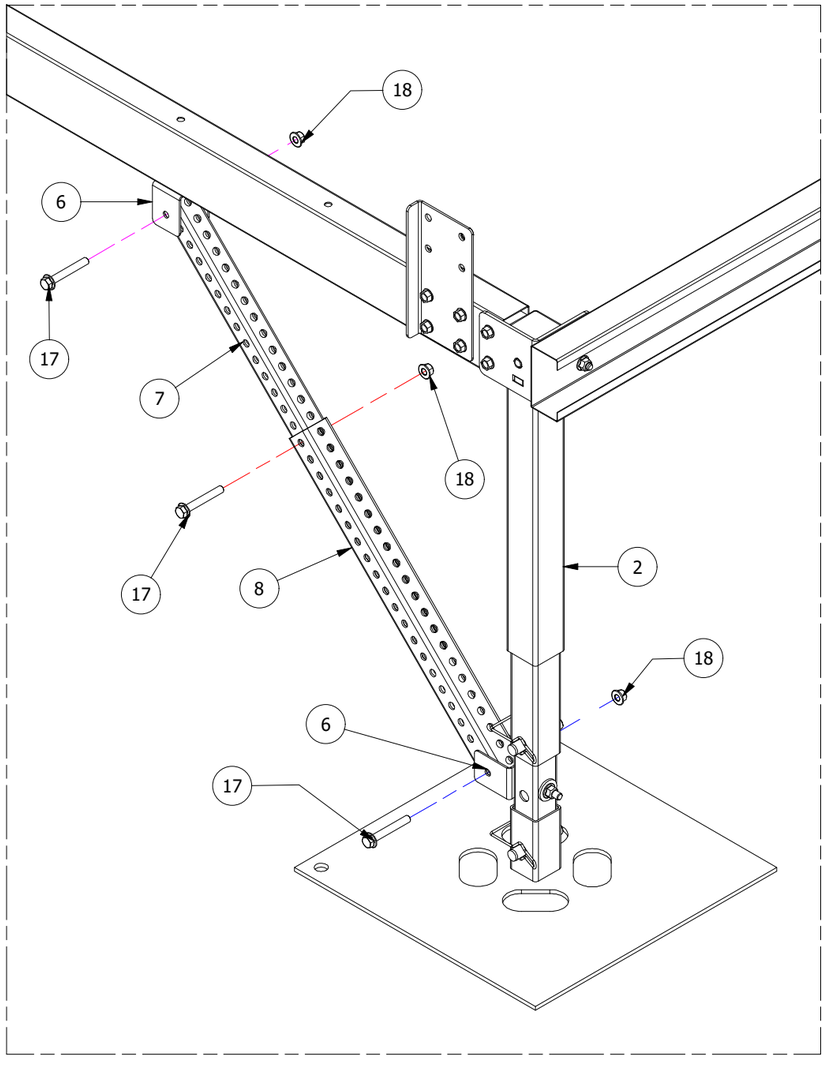

(FRONT CHASSIS) (3x)

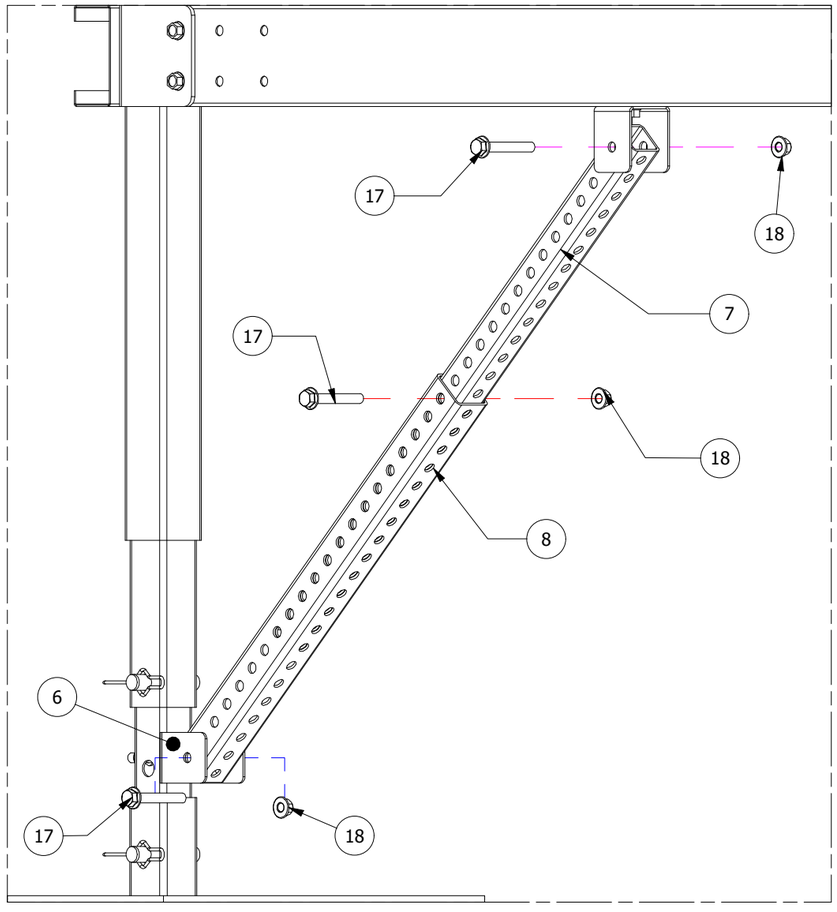

(REAR CHASSIS) (3x)

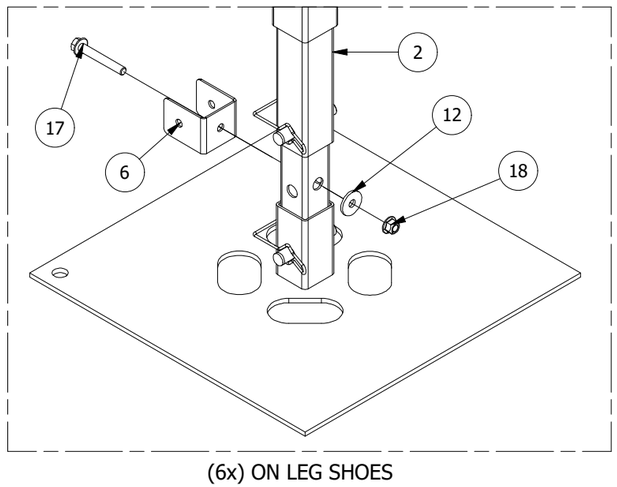

(6x) ON LEG SHOES

STAMP & SIGNATURE:

ENGINEERED POWER SOLUTIONS
1405 Spring Street, Suite 204
Paso Robles, CA 93446

FOR STRUCTURAL ELEMENTS ONLY

OSPREY POWERPLATFORM

NUANCE ENERGY
Revolutionary Solar Racking Structures

PROPRIETARY AND CONFIDENTIAL: THE INFORMATION CONTAINED HERE IN IS THE SOLE PROPERTY OF NUANCE ENERGY GROUP. INC. ANY REPRODUCTION IN PART OR WHOLE WITHOUT WRITTEN PERMISSIONIS PROHIBITED. (C) COPYRIGHT 2013. ALL RIGHTS RESERVED.

MACHINED FILLET RADII 0.38-1.27 [.015-.050]. BREAK ALL SHARP EDGES 0.2-0.8 [.01-.03] RADII OR 45°. SURFACE FINISH IN MICRO (P) INCHES (Ra). INTERPRET DRAWING PER ASME Y14.5, ASME Y14.36, AND AWS A2.4 STANDARDS.

DRAW: RODOLFO PEREIRA	03/26/2020	OSPREY POWERPLATFORM
APPROVED: LUKE ASHWORTH	03/26/2020	TITLE: Osprey PowerPlatform Portrait 2x8, Strut - 72 Cell - HD
WEIGHT: N/A lb		
GENERAL TOLERANCES: DECIMALS .X ± .1, .XX ± .01, .XXX ± .005; ANGULAR ∠ ± 1°		MATERIAL: N/A
		SIZE: B; DWG NO: OSP-STRUT-72CELL-2X8 - HD; REV: 02
		SCALE: 1:8; SHEET 4 OF 10

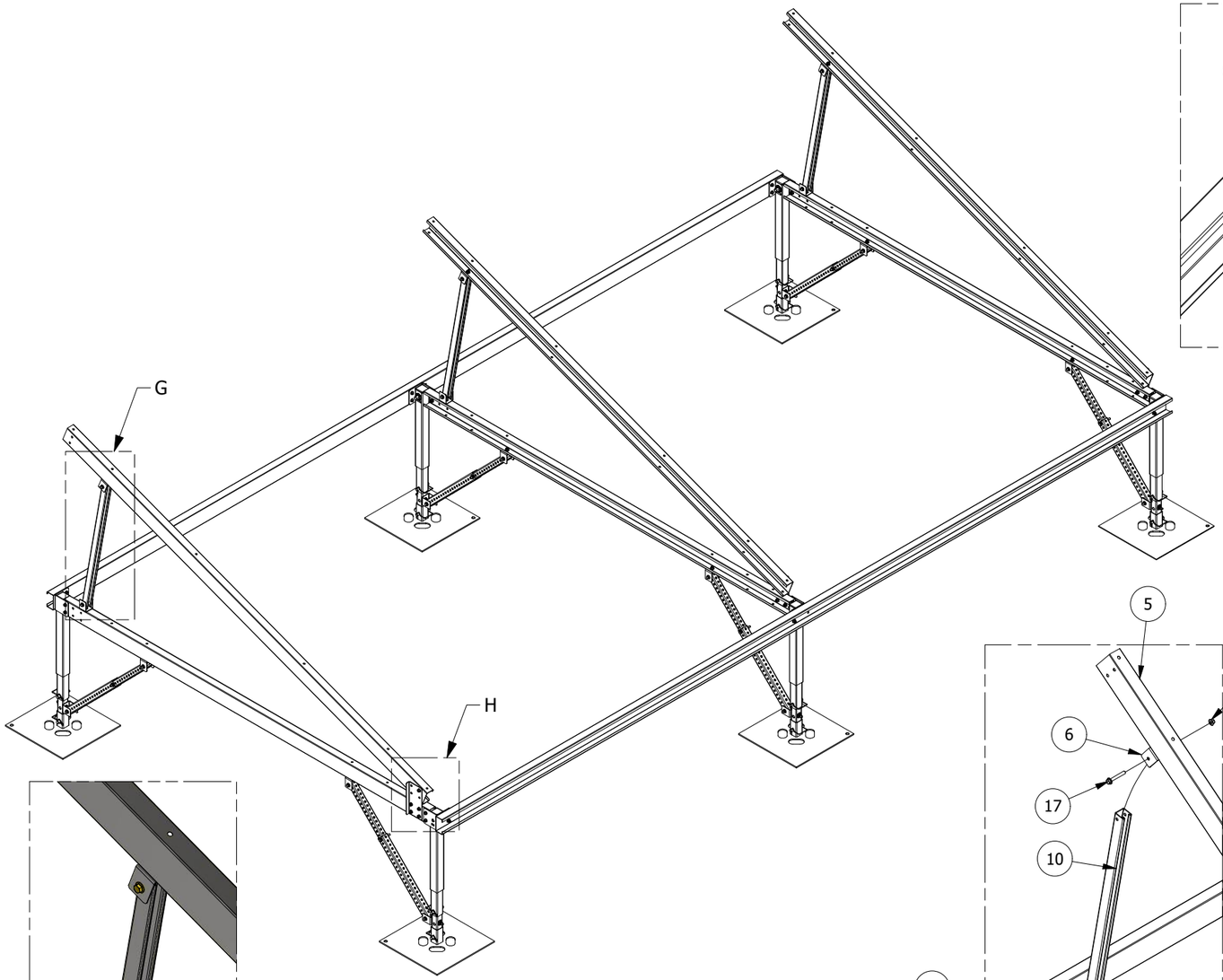

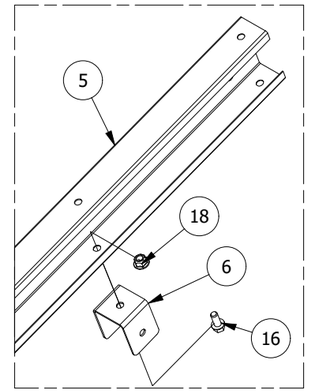

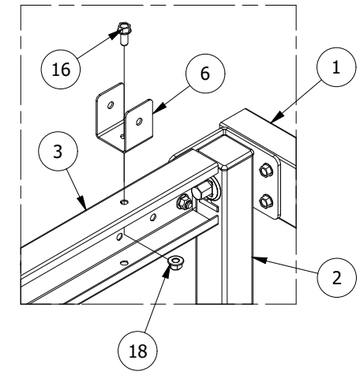

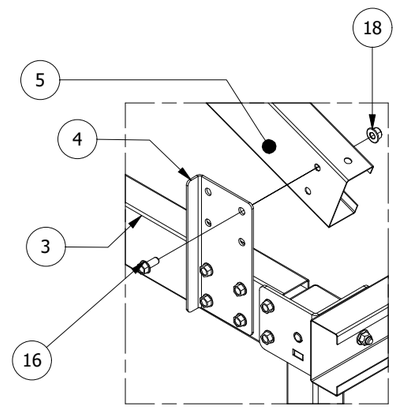

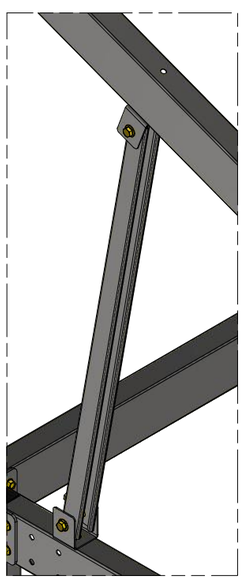

DETAIL G
SCALE 1:10

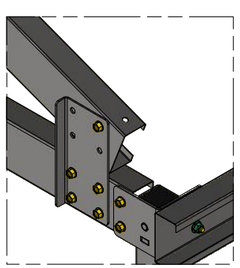

DETAIL H
SCALE 1:10

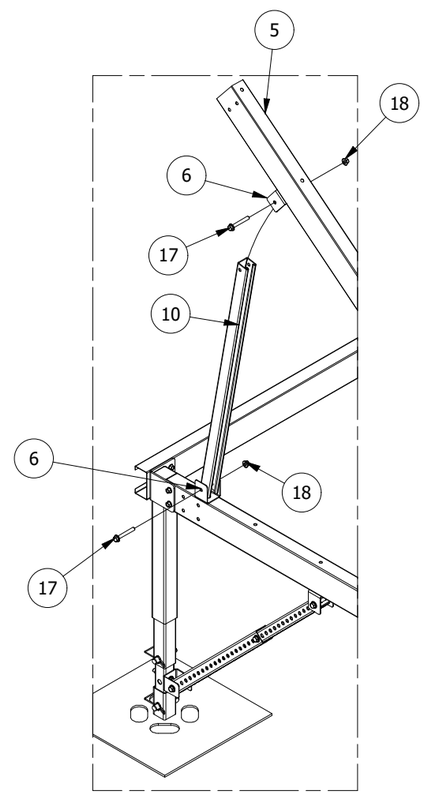

STAMP & SIGNATURE:

ENGINEERED POWER SOLUTIONS
1405 Spring Street, Suite 204
Paso Robles, CA 93446

FOR STRUCTURAL ELEMENTS ONLY

OSPREY POWERPLATFORM

NUANCE ENERGY
Revolutionary Solar Racking Structures

PROPRIETARY AND CONFIDENTIAL: THE INFORMATION CONTAINED HERE IN IS THE SOLE PROPERTY OF NUANCE ENERGY GROUP. INC. ANY REPRODUCTION IN PART OR WHOLE WITHOUT WRITTEN PERMISSIONIS PROHIBITED. (C) COPYRIGHT 2013. ALL RIGHTS RESERVED.

MACHINED FILLET RADII 0.38-1.27 [.015-.050]. BREAK ALL SHARP EDGES 0.2-0.8 [.01-.03] RADII OR 45°. SURFACE FINISH IN MICRO (P) INCHES (Ra). INTERPRET DRAWING PER ASME Y14.5, ASME Y14.36, AND AWS A2.4 STANDARDS.

DRAW: RODOLFO PEREIRA	03/26/2020	OSPREY POWERPLATFORM
APPROVED: LUKE ASHWORTH	03/26/2020	TITLE: Osprey PowerPlatform Portrait 2x8, Strut - 72 Cell - HD
WEIGHT: N/A lb		
GENERAL TOLERANCES: DECIMALS .X ± .1, .XX ± .01, .XXX ± .005; ANGULAR ∠ ± 1°		MATERIAL: N/A
		SIZE: B; DWG NO: OSP-STRUT-72CELL-2X8 - HD; REV: 02
		SCALE: 1:30; SHEET 5 OF 10

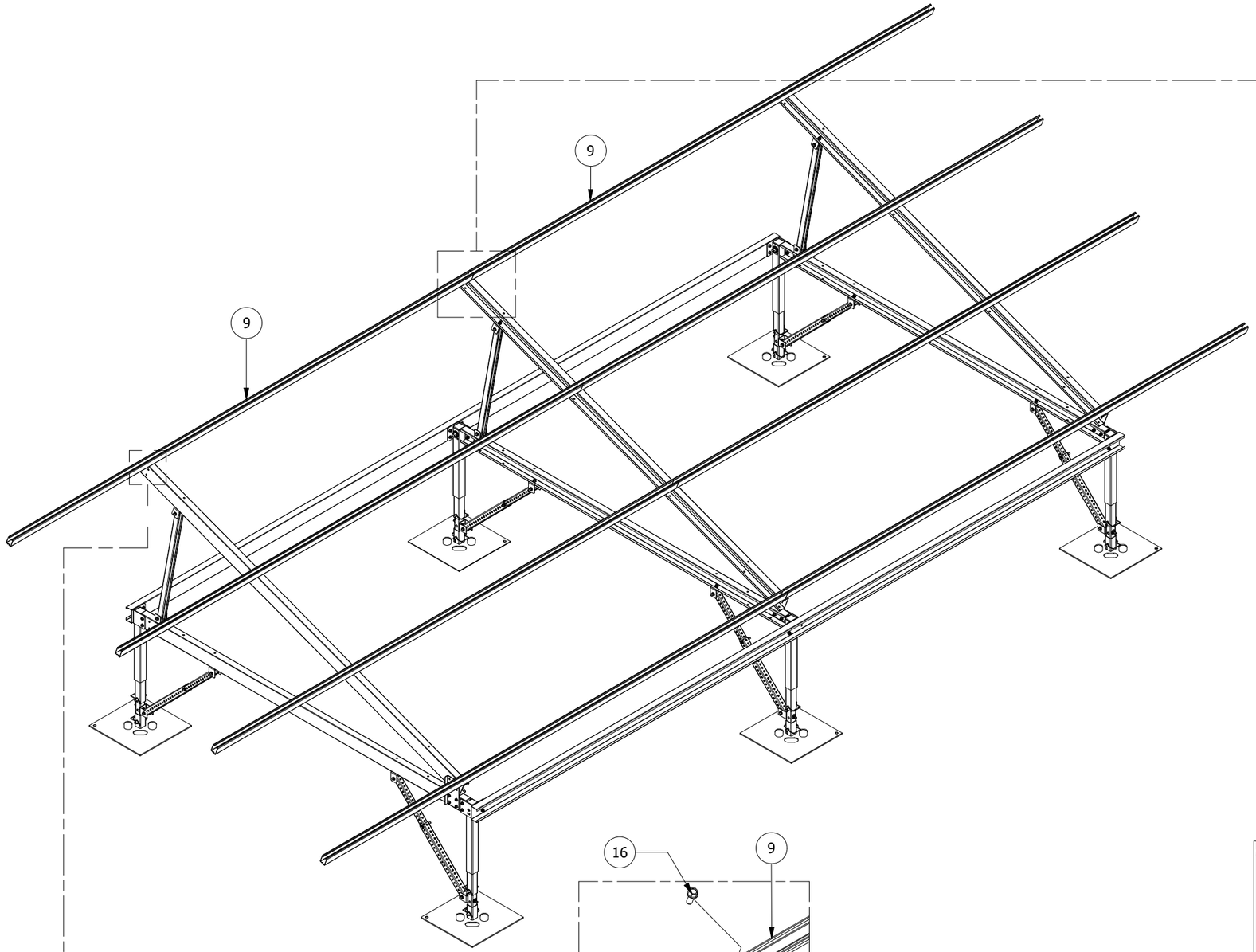

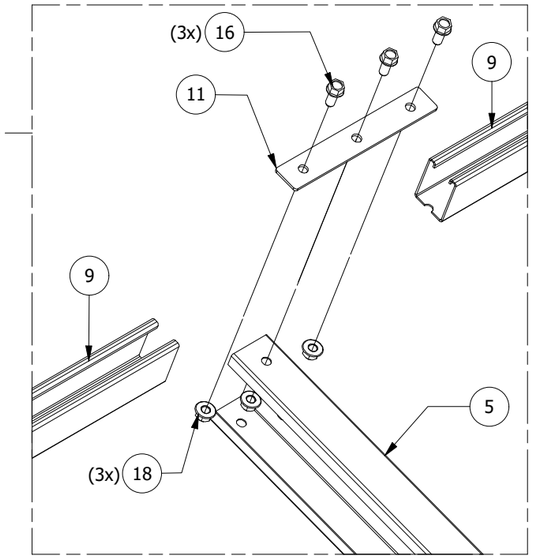

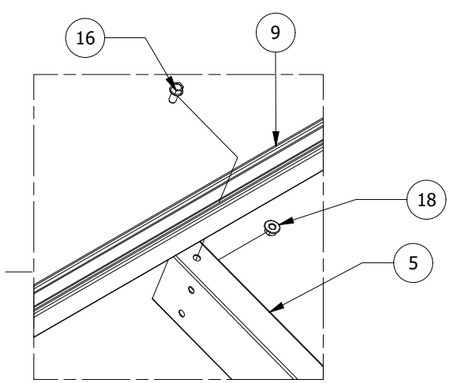

STAMP & SIGNATURE:

ENGINEERED POWER SOLUTIONS
1405 Spring Street, Suite 204
Paso Robles, CA 93446

FOR STRUCTURAL ELEMENTS ONLY

OSPREY POWERPLATFORM

NUANCE ENERGY
Revolutionary Solar Racking Structures

PROPRIETARY AND CONFIDENTIAL: THE INFORMATION CONTAINED HERE IN IS THE SOLE PROPERTY OF NUANCE ENERGY GROUP. INC. ANY REPRODUCTION IN PART OR WHOLE WITHOUT WRITTEN PERMISSIONIS PROHIBITED. (C) COPYRIGHT 2013. ALL RIGHTS RESERVED.

MACHINED FILLET RADII 0.38-1.27 [.015-.050]. BREAK ALL SHARP EDGES 0.2-0.8 [.01-.03] RADII OR 45°. SURFACE FINISH IN MICRO (P) INCHES (Ra). INTERPRET DRAWING PER ASME Y14.5, ASME Y14.36, AND AWS A2.4 STANDARDS.

DRAW: RODOLFO PEREIRA	03/26/2020	OSPREY POWERPLATFORM
APPROVED: LUKE ASHWORTH	03/26/2020	TITLE: Osprey PowerPlatform Portrait 2x8, Strut - 72 Cell - HD
WEIGHT: N/A lb		MATERIAL: N/A
GENERAL TOLERANCES: DECIMALS .X ± .1, .XX ± .01, .XXX ± .005; ANGULAR ∠ ± 1°		SIZE B; DWG NO OSP-STRUT-72CELL-2X8 - HD; REV 02
		SCALE 1:30; SHEET 6 OF 10

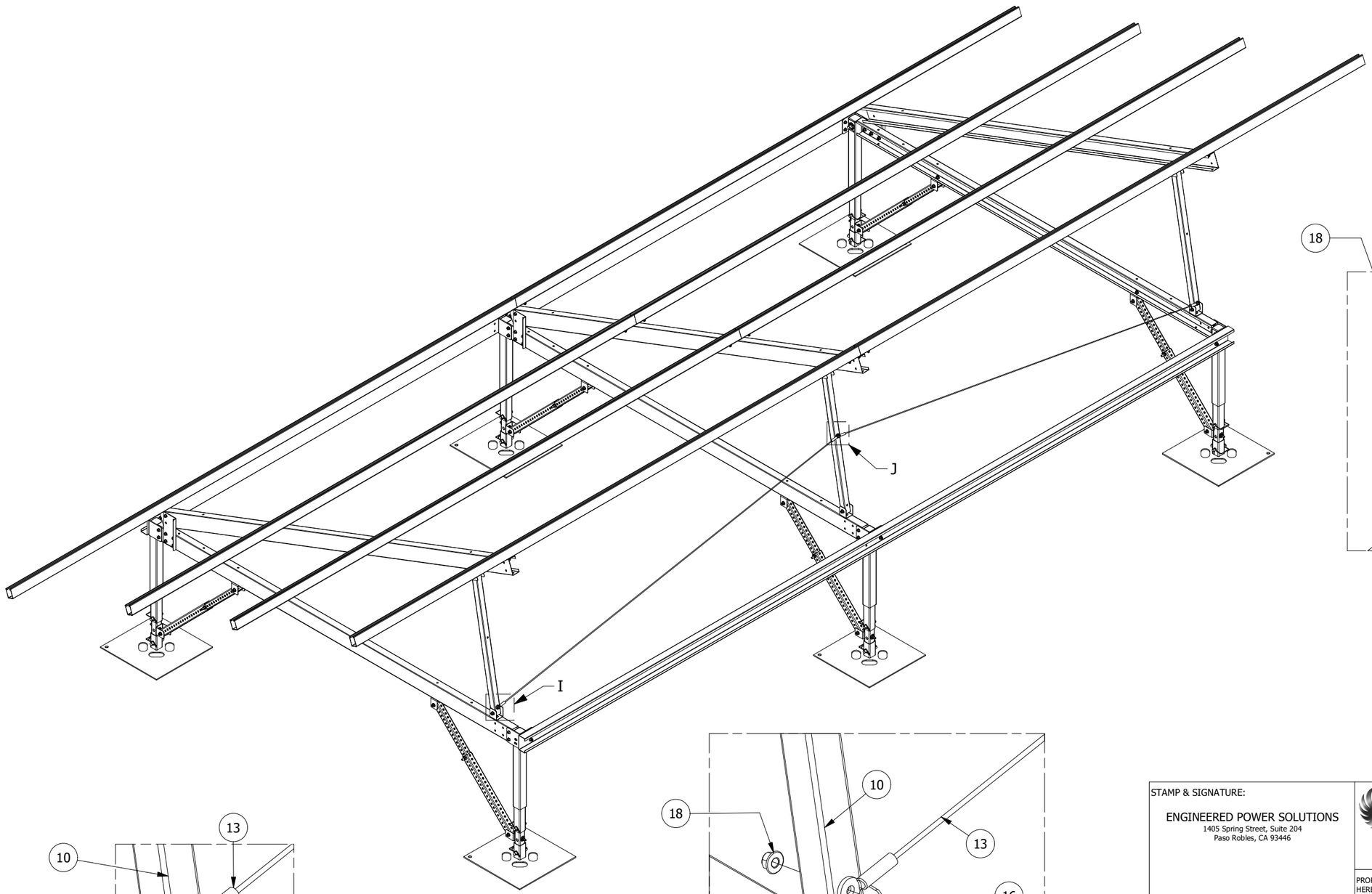

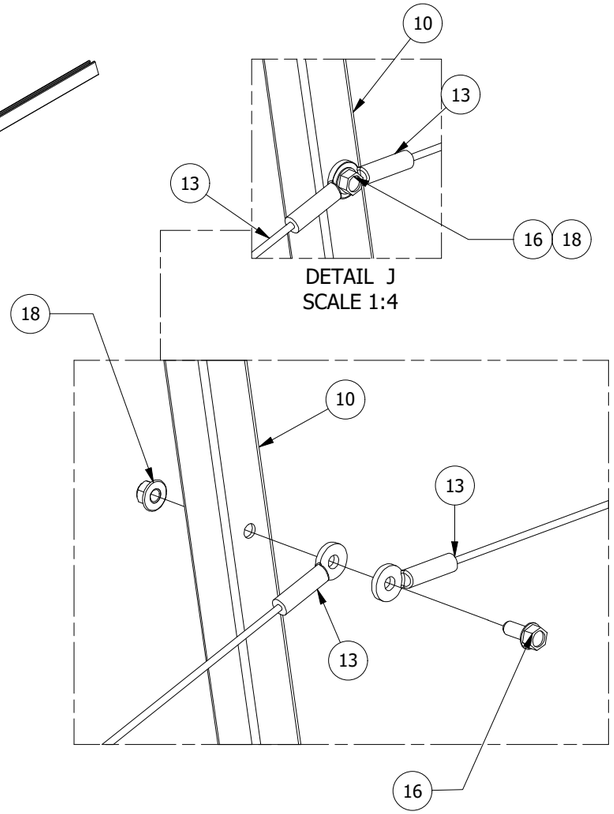

DETAIL J
SCALE 1:4

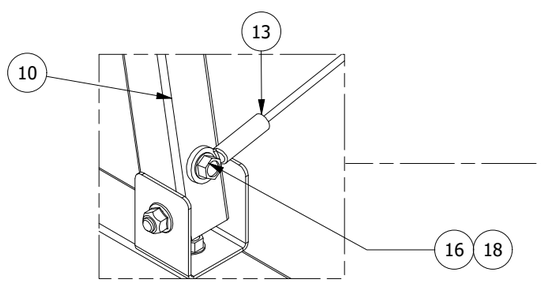

DETAIL I
SCALE 1:4

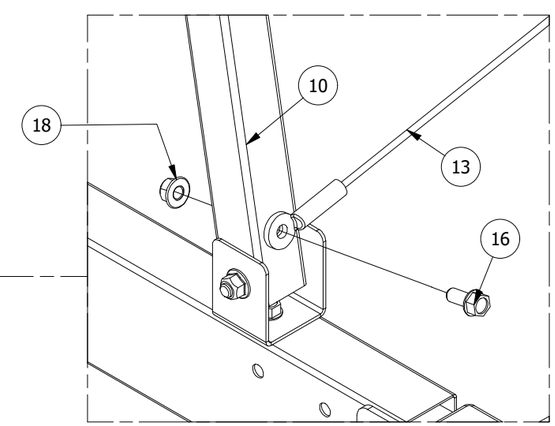

CABLE BRACE MOUNTING (CORNERS)

STAMP & SIGNATURE:

ENGINEERED POWER SOLUTIONS
1405 Spring Street, Suite 204
Paso Robles, CA 93446

FOR STRUCTURAL ELEMENTS ONLY

OSPREY POWERPLATFORM

NUANCE ENERGY
Revolutionary Solar Racking Structures

PROPRIETARY AND CONFIDENTIAL: THE INFORMATION CONTAINED HERE IN IS THE SOLE PROPERTY OF NUANCE ENERGY GROUP. INC. ANY REPRODUCTION IN PART OR WHOLE WITHOUT WRITTEN PERMISSIONIS PROHIBITED. (C) COPYRIGHT 2013. ALL RIGHTS RESERVED.

MACHINED FILLET RADII 0.38-1.27 [.015-.050]. BREAK ALL SHARP EDGES 0.2-0.8 [.01-.03] RADII OR 45°. SURFACE FINISH IN MICRO (P) INCHES (Ra). INTERPRET DRAWING PER ASME Y14.5, ASME Y14.36, AND AWS A2.4 STANDARDS.

DRAW: RODOLFO PEREIRA	03/26/2020	OSPREY POWERPLATFORM
APPROVED: LUKE ASHWORTH	03/26/2020	TITLE: Osprey PowerPlatform Portrait 2x8, Strut - 72 Cell - HD
WEIGHT: N/A lb		
GENERAL TOLERANCES: DECIMALS .X ± .1, .XX ± .01, .XXX ± .005; ANGULAR ∠ ± 1°		MATERIAL: N/A
		SIZE B; DWG NO OSP-STRUT-72CELL-2X8 - HD; REV 02
		SCALE 1:25; SHEET 7 OF 10

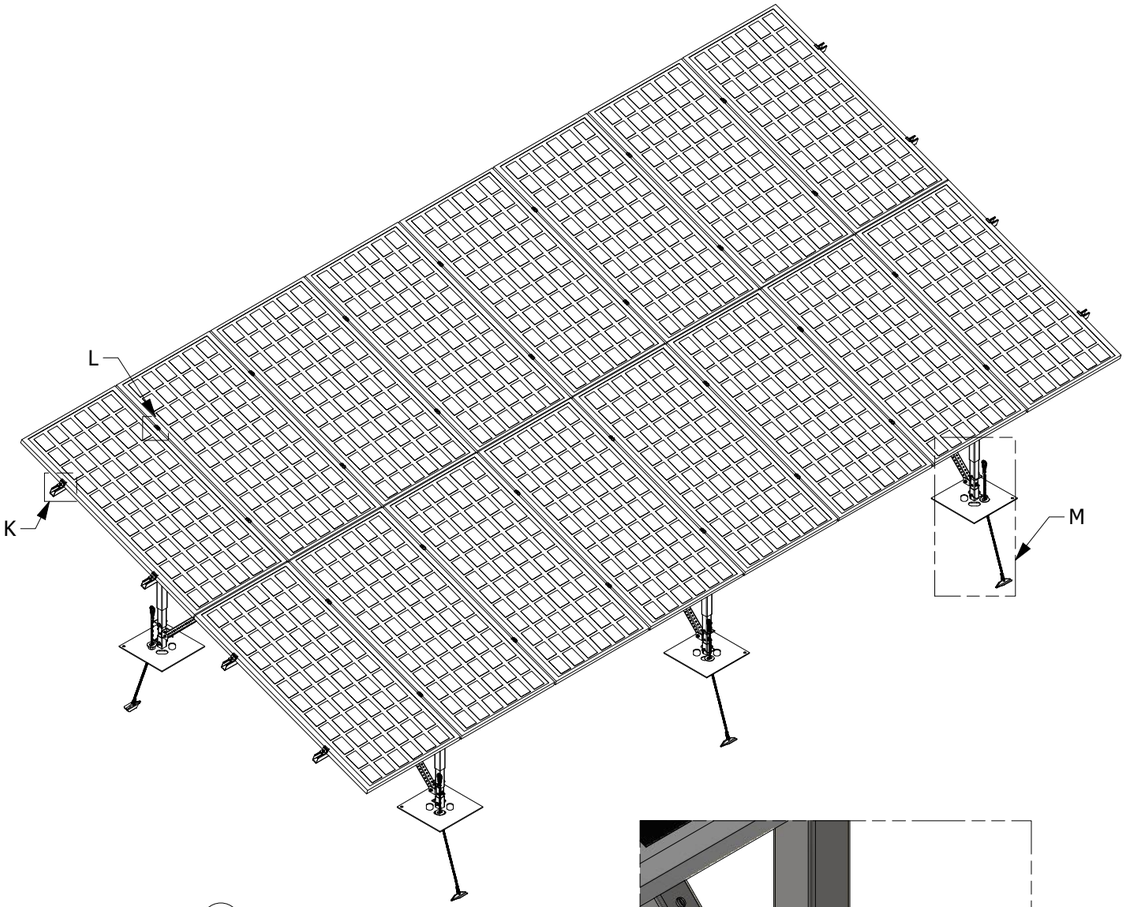

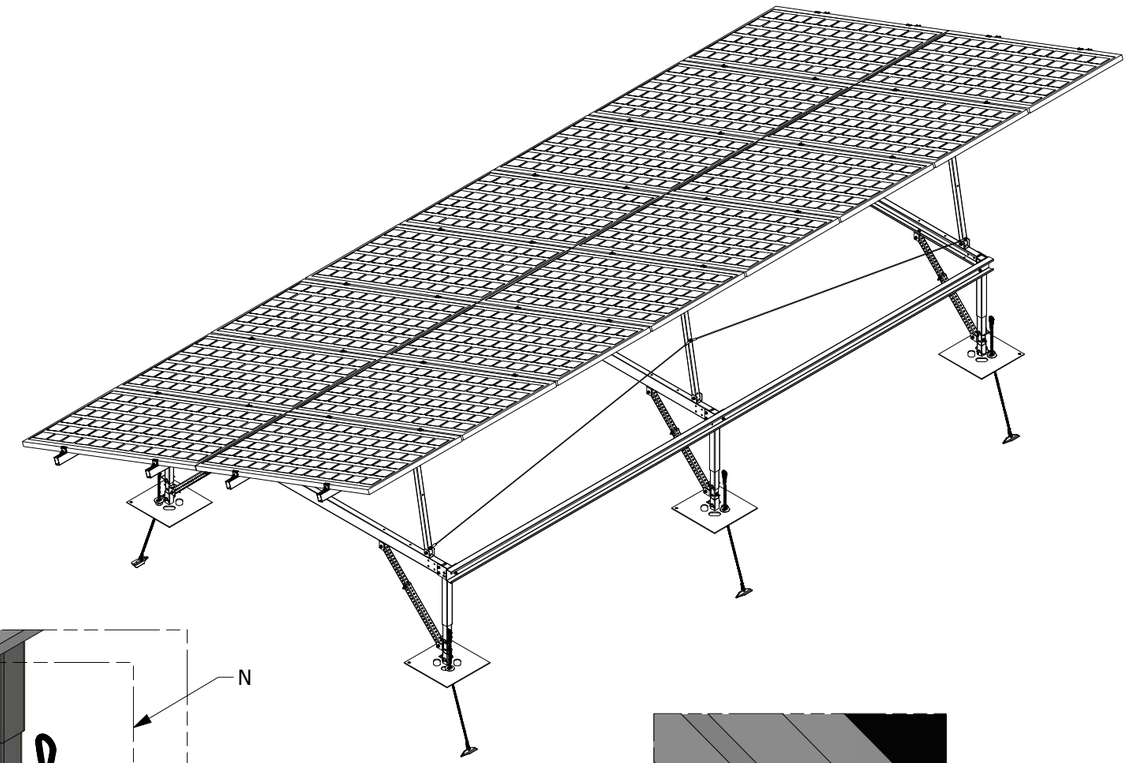

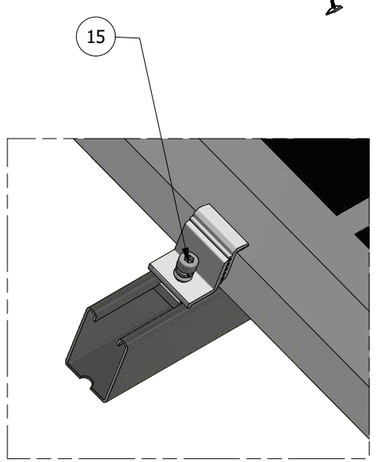

DETAIL K
SCALE 1:4

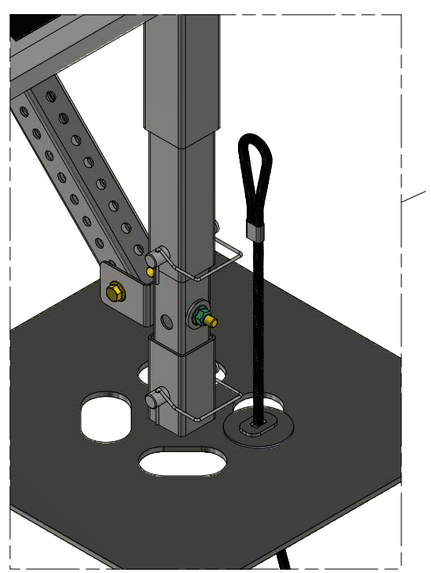

DETAIL N (ANCHOR DETAIL)
SCALE 1:6

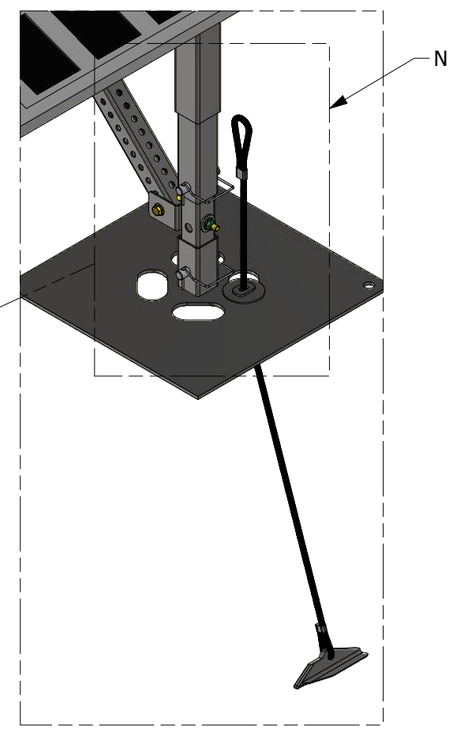

DETAIL M (Typ. 6x - 180º)
SCALE 1:10

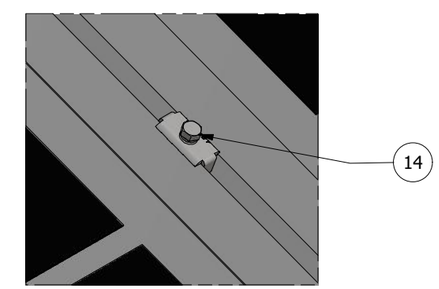

DETAIL L
SCALE 1:4

STAMP & SIGNATURE:

ENGINEERED POWER SOLUTIONS
1405 Spring Street, Suite 204
Paso Robles, CA 93446

FOR STRUCTURAL ELEMENTS ONLY

OSPREY POWERPLATFORM

NUANCE ENERGY
Revolutionary Solar Racking Structures

PROPRIETARY AND CONFIDENTIAL: THE INFORMATION CONTAINED HERE IN IS THE SOLE PROPERTY OF NUANCE ENERGY GROUP. INC. ANY REPRODUCTION IN PART OR WHOLE WITHOUT WRITTEN PERMISSIONIS PROHIBITED. (C) COPYRIGHT 2013. ALL RIGHTS RESERVED.

MACHINED FILLET RADII 0.38-1.27 [.015-.050]. BREAK ALL SHARP EDGES 0.2-0.8 [.01-.03] RADII OR 45°. SURFACE FINISH IN MICRO (P) INCHES (Ra). INTERPRET DRAWING PER ASME Y14.5, ASME Y14.36, AND AWS A2.4 STANDARDS.

DRAW: RODOLFO PEREIRA	03/26/2020	OSPREY POWERPLATFORM
APPROVED: LUKE ASHWORTH	03/26/2020	TITLE: Osprey PowerPlatform Portrait 2x8, Strut - 72 Cell - HD
WEIGHT: N/A lb		
GENERAL TOLERANCES: DECIMALS .X ± .1, .XX ± .01, .XXX ± .005; ANGULAR ∠ ± 1º		MATERIAL: N/A
		SIZE B; DWG NO OSP-STRUT-72CELL-2X8 - HD; REV 02
		SCALE 1:45; SHEET 8 OF 10

(THERMAL EXPANSION GAP NEEDED AFTER 5 OSPREY CONNECTED TOGETHER)

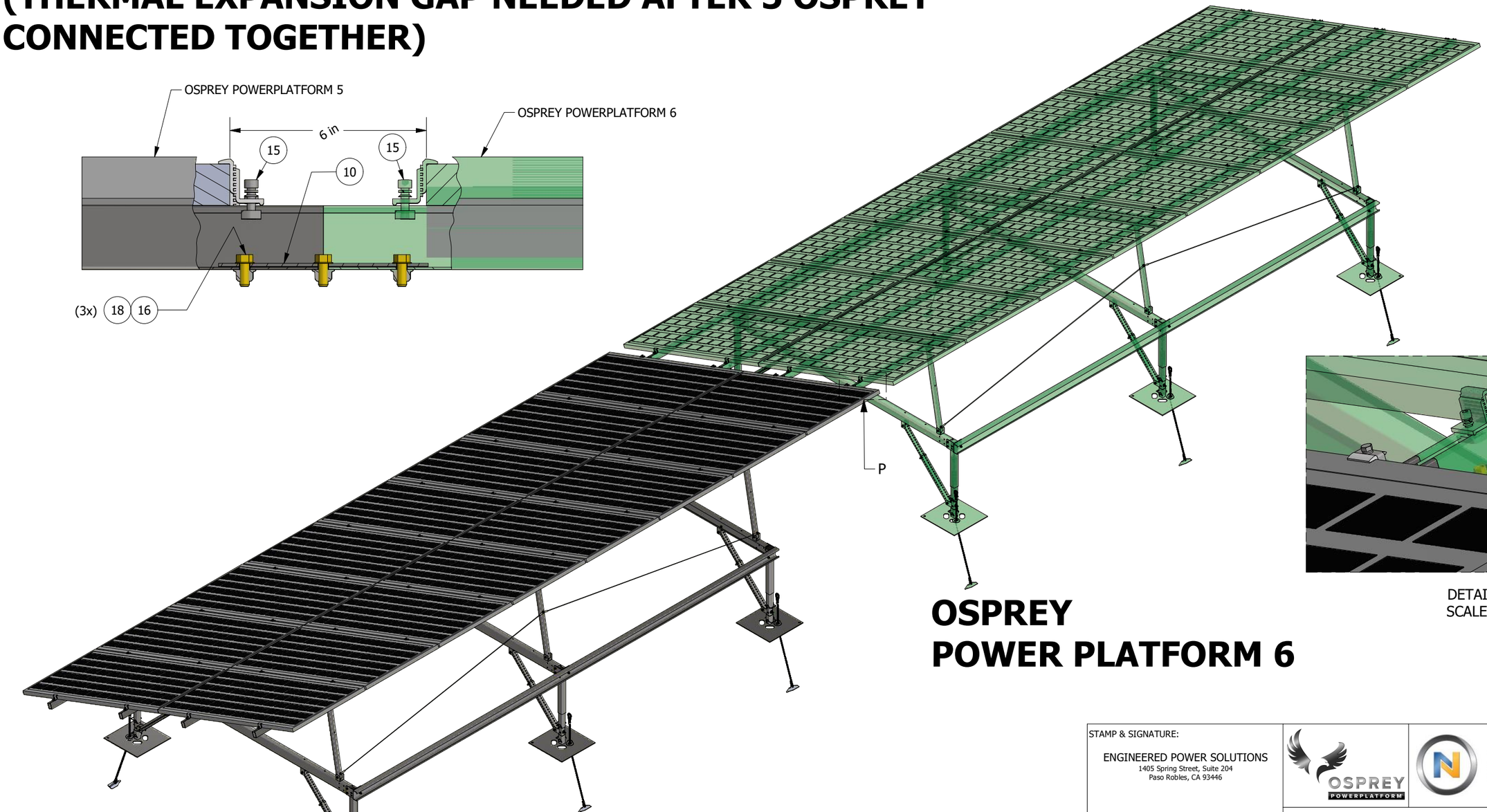

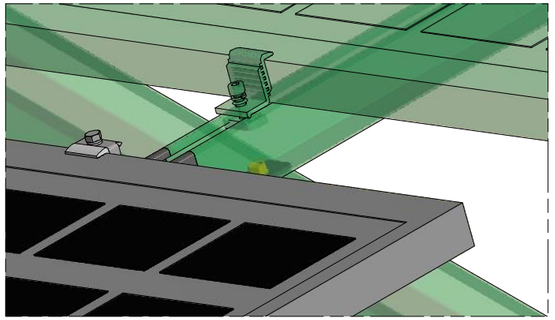

DETAIL P
SCALE 1:5

OSPREY POWER PLATFORM 6

AFTER 5th OSPREY POWERPLATFORM CREATE EXPANSION GAP

STAMP & SIGNATURE:

ENGINEERED POWER SOLUTIONS
1405 Spring Street, Suite 204
Paso Robles, CA 93446

FOR STRUCTURAL ELEMENTS ONLY

OSPREY POWERPLATFORM

NUANCE ENERGY
Revolutionary Solar Racking Structures

PROPRIETARY AND CONFIDENTIAL: THE INFORMATION CONTAINED HERE IN IS THE SOLE PROPERTY OF NUANCE ENERGY GROUP. INC. ANY REPRODUCTION IN PART OR WHOLE WITHOUT WRITTEN PERMISSIONIS PROHIBITED. (C) COPYRIGHT 2013. ALL RIGHTS RESERVED.

MACHINED FILLET RADII 0.38-1.27 [.015-.050]. BREAK ALL SHARP EDGES 0.2-0.8 [.01-.03] RADII OR 45°. SURFACE FINISH IN MICRO (P) INCHES (Ra). INTERPRET DRAWING PER ASME Y14.5, ASME Y14.36, AND AWS A2.4 STANDARDS.

DRAW: RODOLFO PEREIRA	03/26/2020	OSPREY POWERPLATFORM
APPROVED: LUKE ASHWORTH	03/26/2020	TITLE: Osprey PowerPlatform Portrait 2x8, Strut - 72 Cell - HD
WEIGHT: N/A lb		MATERIAL: N/A
GENERAL TOLERANCES: DECIMALS .X ± .1, .XX ± .01, .XXX ± .005 / ANGULAR ∠ ± 1°		SIZE B / DWG NO OSP-STRUT-72CELL-2X8 - HD / REV 02
		SCALE 1:40 / SHEET 9 OF 10

(THERMAL EXPANSION GAP NEEDED CONNECTED TOGETHER)

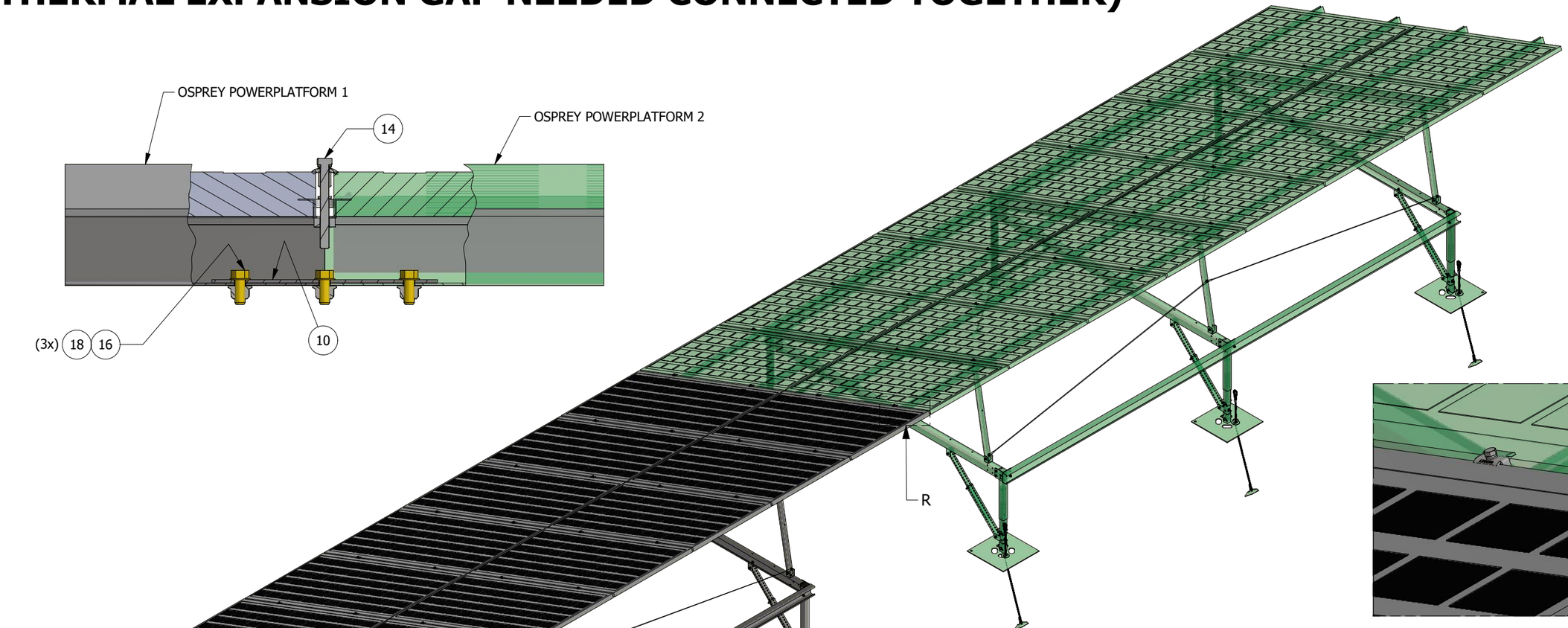

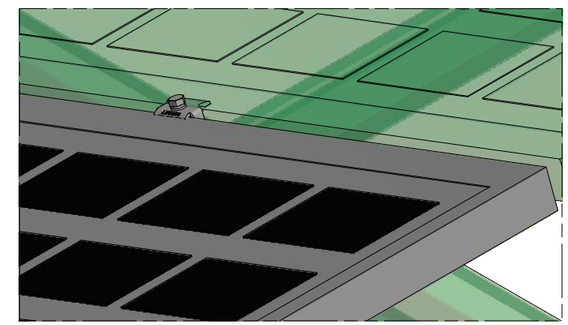

DETAIL R
SCALE 1:5

OSPREY
POWER PLATFORM 2

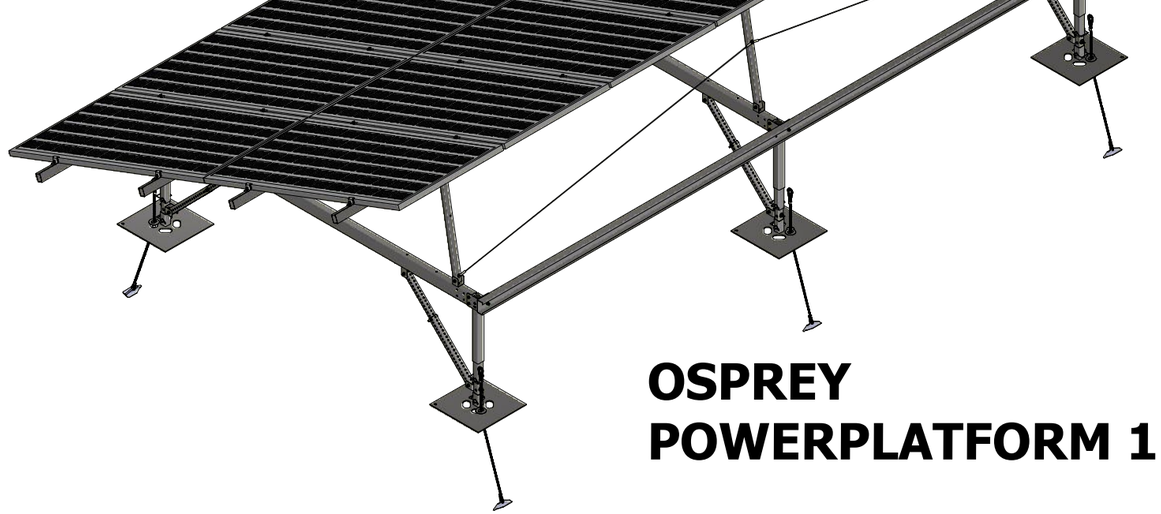

OSPREY
POWERPLATFORM 1

STAMP & SIGNATURE:

ENGINEERED POWER SOLUTIONS
1405 Spring Street, Suite 204
Paso Robles, CA 93446

FOR STRUCTURAL ELEMENTS ONLY

OSPREY POWERPLATFORM

NUANCE ENERGY
Revolutionary Solar Racking Structures

PROPRIETARY AND CONFIDENTIAL: THE INFORMATION CONTAINED HERE IN IS THE SOLE PROPERTY OF NUANCE ENERGY GROUP. INC. ANY REPRODUCTION IN PART OR WHOLE WITHOUT WRITTEN PERMISSIONIS PROHIBITED. (C) COPYRIGHT 2013. ALL RIGHTS RESERVED.

MACHINED FILLET RADII 0.38-1.27 [.015-.050]. BREAK ALL SHARP EDGES 0.2-0.8 [.01-.03] RADII OR 45°. SURFACE FINISH IN MICRO (P) INCHES (Ra). INTERPRET DRAWING PER ASME Y14.5, ASME Y14.36, AND AWS A2.4 STANDARDS.

DRAW: RODOLFO PEREIRA	03/26/2020	OSPREY POWERPLATFORM
APPROVED: LUKE ASHWORTH	03/26/2020	TITLE: Osprey PowerPlatform Portrait 2x8, Strut - 72 Cell - HD
WEIGHT: N/A lb		MATERIAL: N/A
GENERAL TOLERANCES: DECIMALS .X ± .1, .XX ± .01, .XXX ± .005; ANGULAR ∠ ± 1°		SIZE B; DWG NO OSP-STRUT-72CELL-2X8 - HD; REV 02
		SCALE 1:40; SHEET 10 OF 10