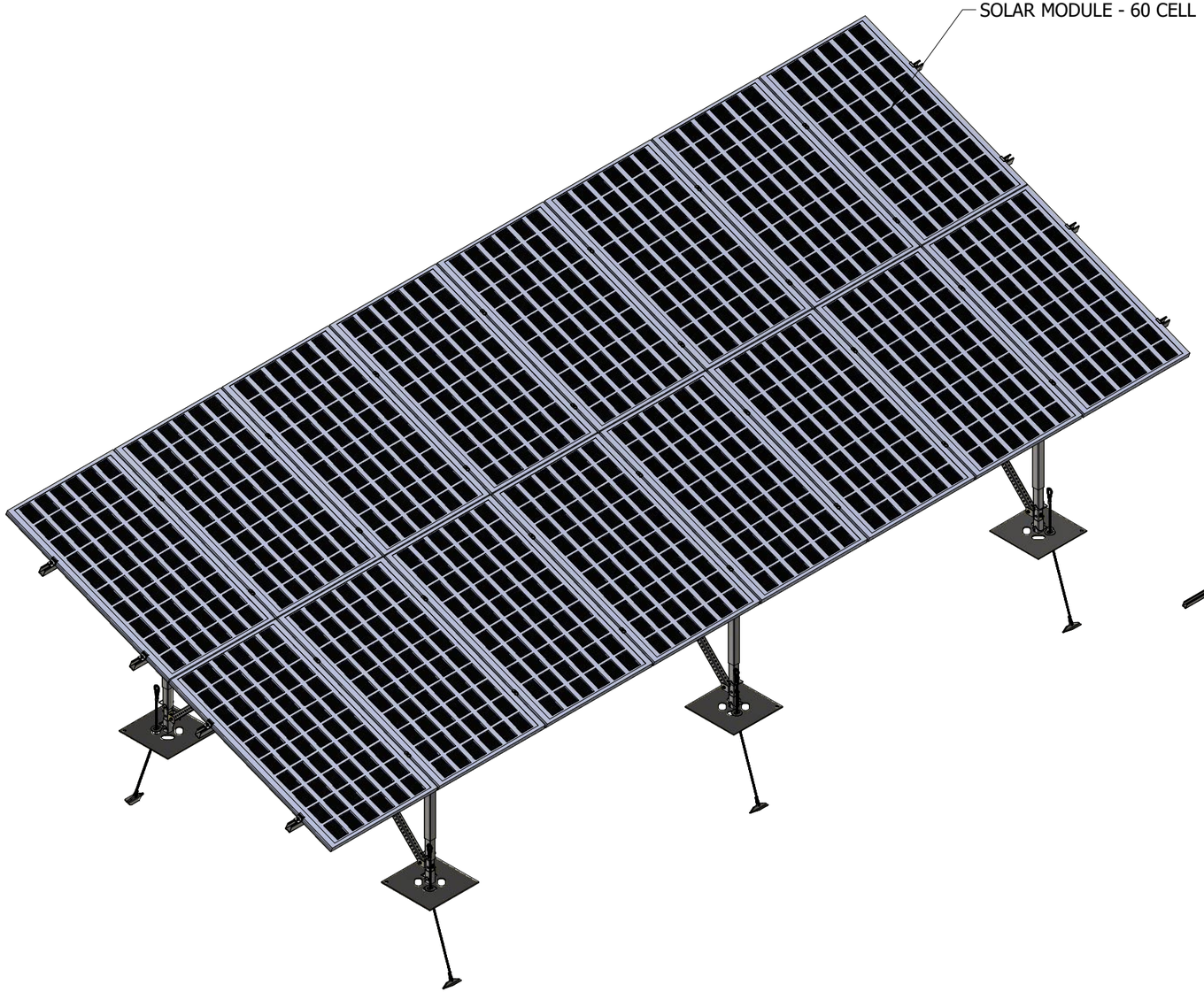

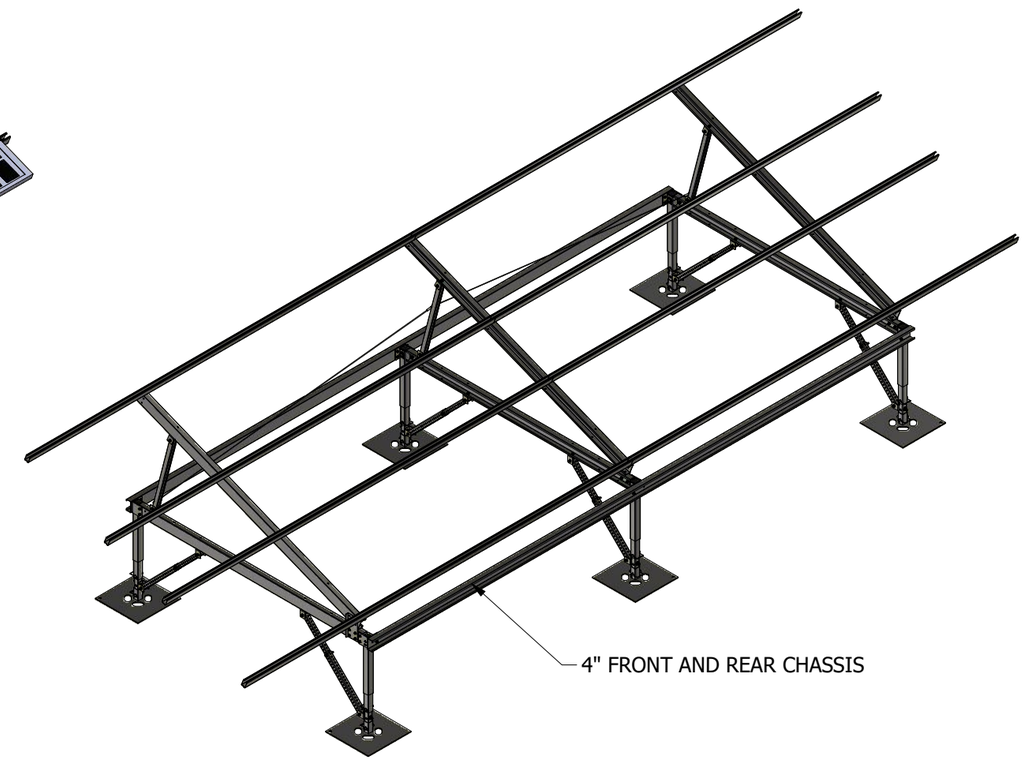

STAMP & SIGNATURE:

ENGINEERED POWER SOLUTIONS
1405 Spring Street, Suite 204
Paso Robles, CA 93446

FOR STRUCTURAL ELEMENTS ONLY

OSPREY POWERPLATFORM

NUANCE ENERGY
Revolutionary Solar Racking Structures

PROPRIETARY AND CONFIDENTIAL: THE INFORMATION CONTAINED HERE IN IS THE SOLE PROPERTY OF NUANCE ENERGY GROUP. INC. ANY REPRODUCTION IN PART OR WHOLE WITHOUT WRITTEN PERMISSIONIS PROHIBITED. (C) COPYRIGHT 2013. ALL RIGHTS RESERVED.

MACHINED FILLET RADII 0.38-1.27 [.015-.050]. BREAK ALL SHARP EDGES 0.2-0.8 [.01-.03] RADII OR 45°. SURFACE FINISH IN MICRO (P) INCHES (Ra). INTERPRET DRAWING PER ASME Y14.5, ASME Y14.36, AND AWS A2.4 STANDARDS.

DRAW: RODOLFO PEREIRA	03/25/2020	OSPREY POWERPLATFORM
APPROVED: LUKE ASHWORTH	03/25/2020	TITLE: Osprey PowerPlatform Portrait 2x8, Strut - 60 Cell - XHD
WEIGHT: N/A lb		MATERIAL: N/A
GENERAL TOLERANCES: DECIMALS .X ± .1, .XX ± .01, .XXX ± .005; ANGULAR ∠ ± 1°		SIZE B; DWG NO OSP-STRUT-60CELL-2X8 - XHD; REV 02
		SCALE 1:35; SHEET 1 OF 10

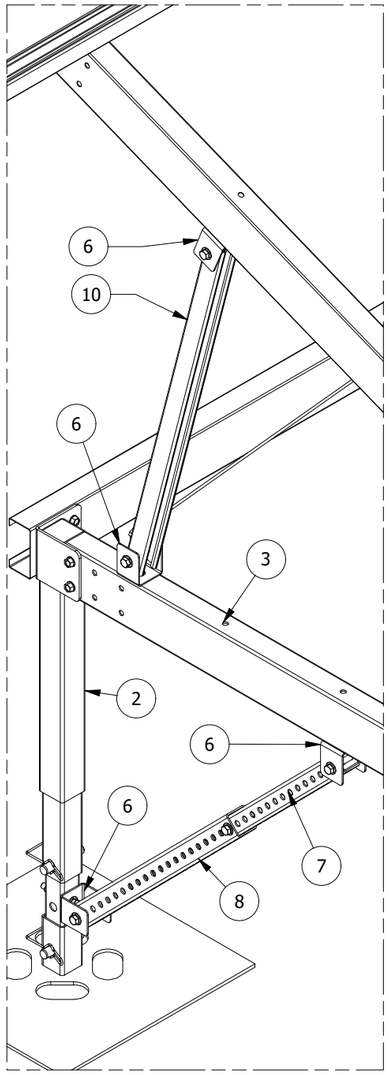

DETAIL A (3x)
SCALE 1:10

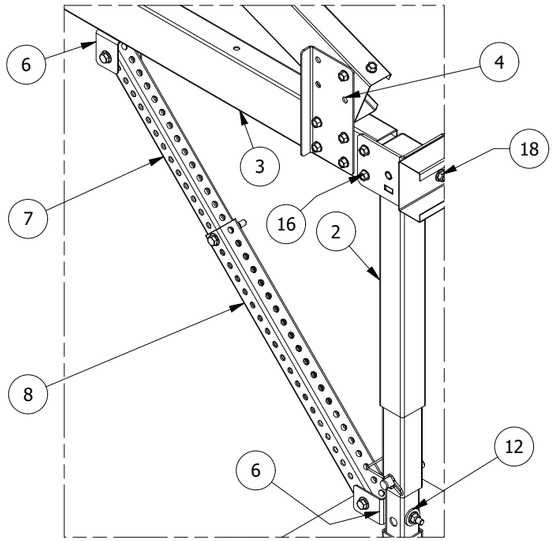

DETAIL B (3x)
SCALE 1:10

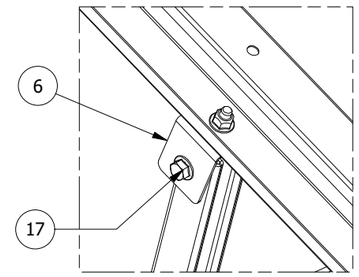

DETAIL C
SCALE 1:5

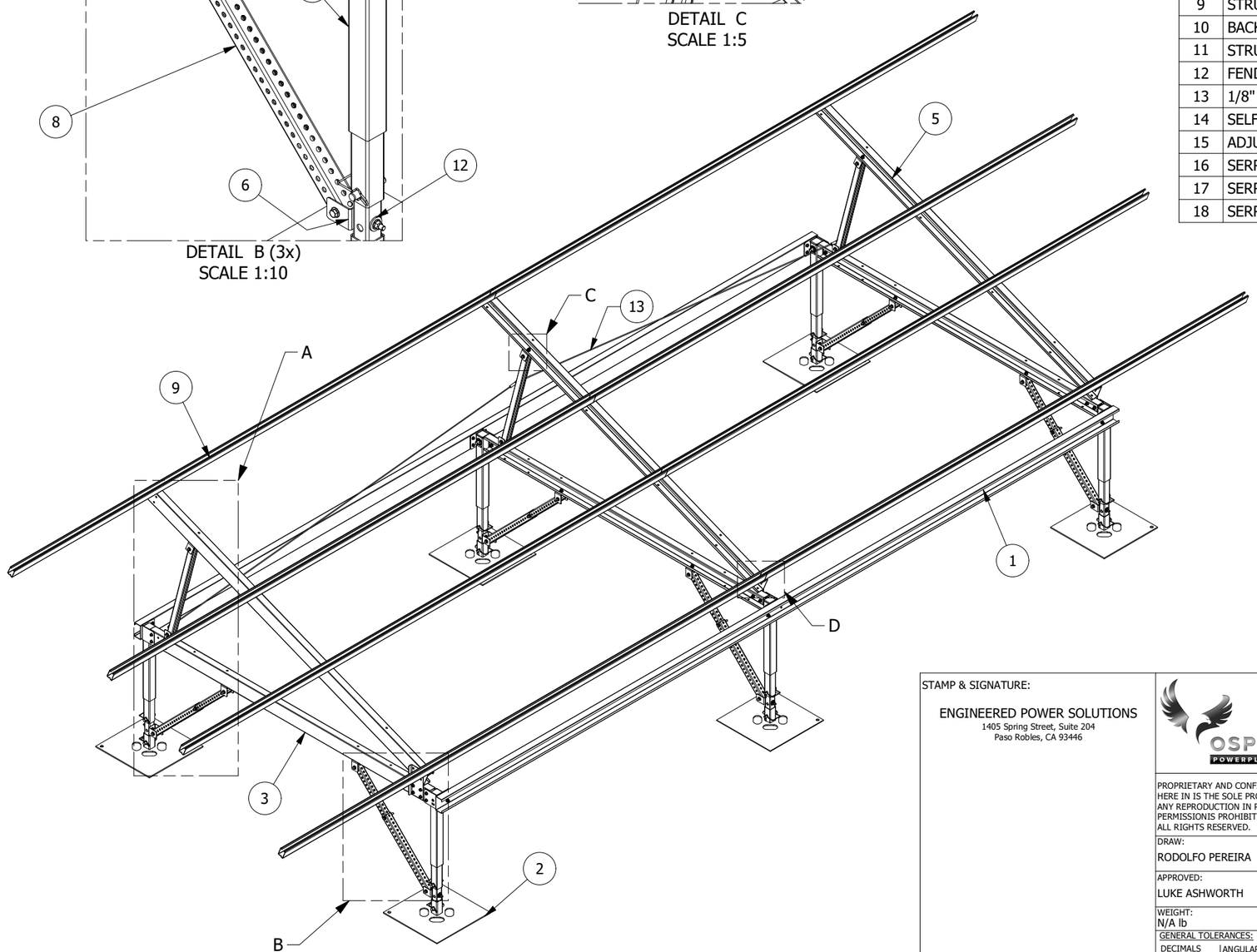

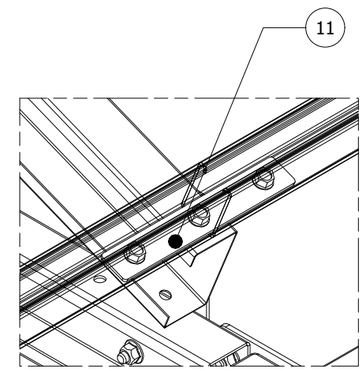

DETAIL D
SCALE 1:5

PARTS LIST

ITEM	DESCRIPTION	QTY
1	FRONT AND REAR CHASSIS - 2x8 XHD - G90	2
2	POWER ADJUSTABLE LEG	6
3	CHASSIS STUD - USA 60 CELL XHD	3
4	RACK MOUNTING BRACKET - 4 HOLE	3
5	STRONGBACK-STRUT60 - XHD G90	3
6	BACK BRACE BRACKET	18
7	TELESCOPIC TUBING 1.50 x 1.50	6
8	TELESCOPIC TUBING 1.75 x 1.75	6
9	STRUT RAIL - USA 2x8 XHD - G90	8
10	BACK BRACE - AS DRAWING 402-009	3
11	STRUT SPLICE PLATE	4
12	FENDER WASHER	6
13	1/8" CABLE BRACE AS DRAWING	2
14	SELF-BONDING MID CLAMP	28
15	ADJUSTABLE END CLAMP	8
16	SERRATED FLANGE BOLT - 3/8"-16 x 1" - [514-008-01]	74
17	SERRATED FLANGE BOLT 3/8"-16 x 2.5" - [514-007-01]	30
18	SERRATED FLANGE NUT -3/8"-16 [514-006-01]	104

STAMP & SIGNATURE:

ENGINEERED POWER SOLUTIONS
1405 Spring Street, Suite 204
Paso Robles, CA 93446

FOR STRUCTURAL ELEMENTS ONLY

OSPREY POWERPLATFORM

NUANCE ENERGY
Revolutionary Solar Racking Structures

PROPRIETARY AND CONFIDENTIAL: THE INFORMATION CONTAINED HERE IN IS THE SOLE PROPERTY OF NUANCE ENERGY GROUP. INC. ANY REPRODUCTION IN PART OR WHOLE WITHOUT WRITTEN PERMISSIONIS PROHIBITED. (C) COPYRIGHT 2013. ALL RIGHTS RESERVED.

MACHINED FILLET RADII 0.38-1.27 [.015-.050]. BREAK ALL SHARP EDGES 0.2-0.8 [.01-.03] RADII OR 45°. SURFACE FINISH IN MICRO (P) INCHES (Ra). INTERPRET DRAWING PER ASME Y14.5, ASME Y14.36, AND AWS A2.4 STANDARDS.

DRAW: RODOLFO PEREIRA 03/25/2020

APPROVED: LUKE ASHWORTH 03/25/2020

WEIGHT: N/A lb

GENERAL TOLERANCES:

DECIMALS	ANGULAR
.X ± .1	∠ ± 1°
.XX ± .01	
.XXX ± .005	

OSPREY POWERPLATFORM

TITLE: Osprey PowerPlatform Portrait 2x8, Strut - 60 Cell - XHD

MATERIAL: N/A

SIZE	DWG NO	REV
B	OSP-STRUT-60CELL-2X8 - XHD	02

SCALE 1:30 SHEET 2 OF 10

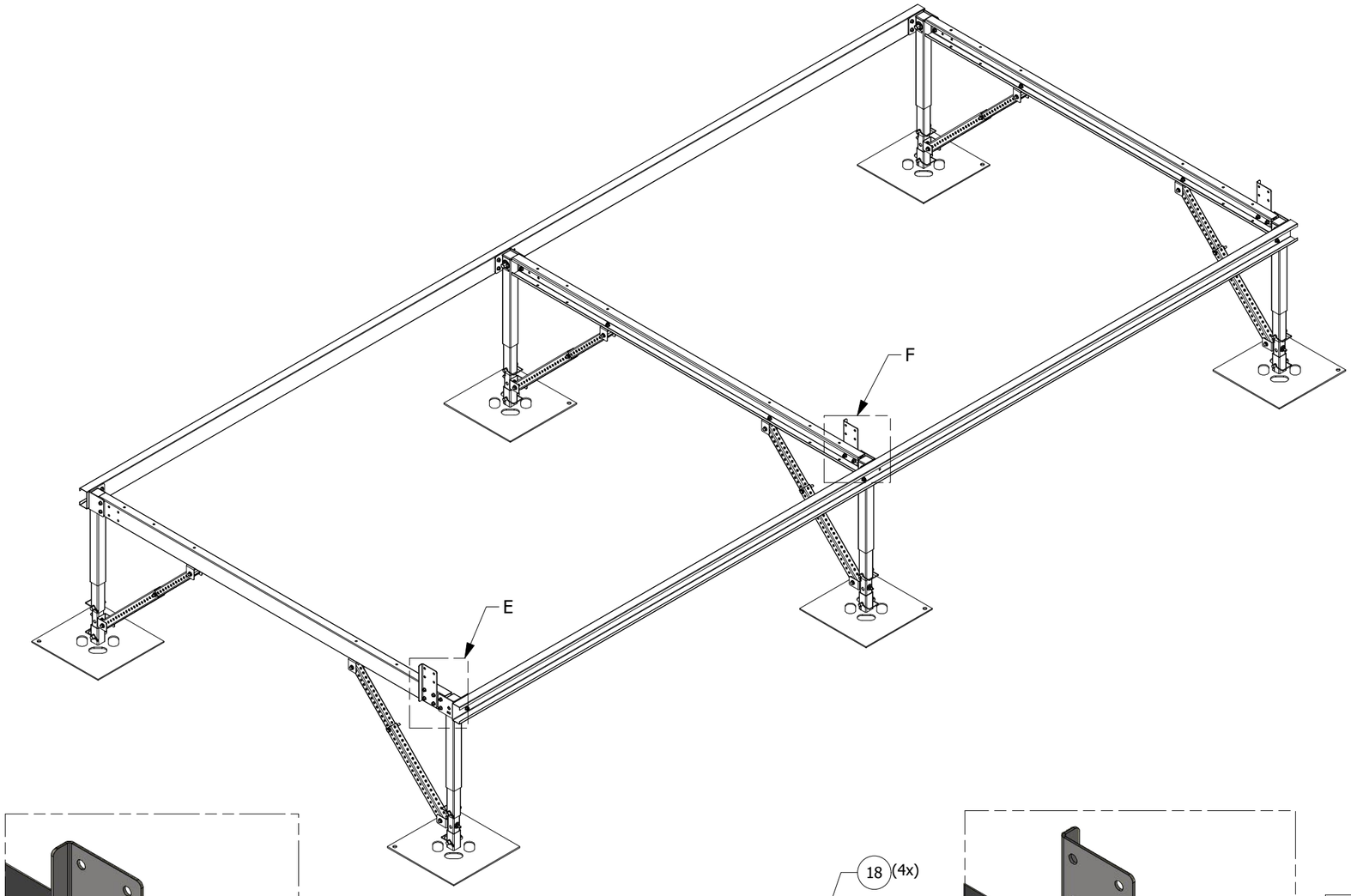

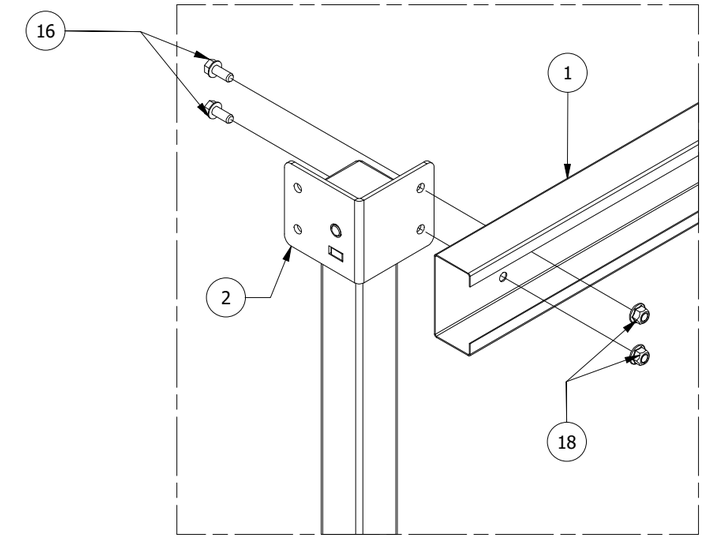

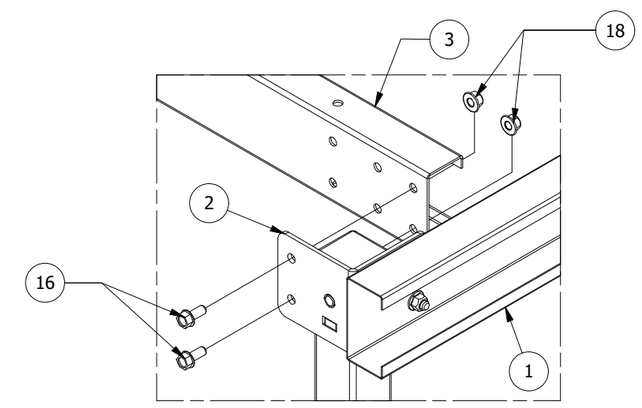

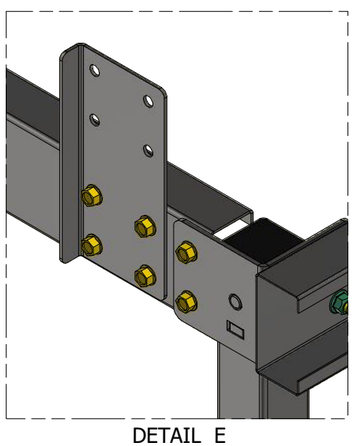

DETAIL E
SCALE 1:5

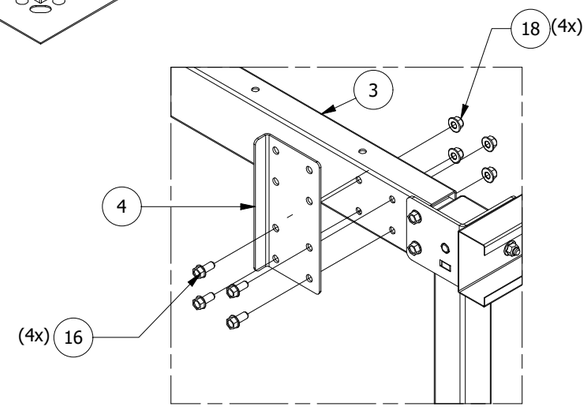

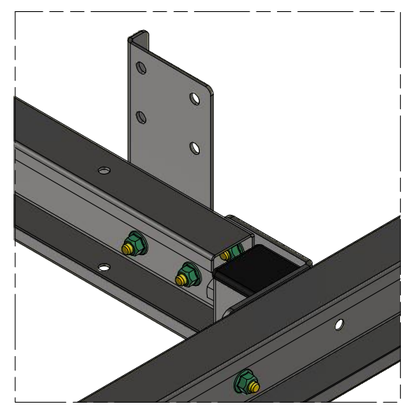

DETAIL F
SCALE 1:5

STAMP & SIGNATURE:

ENGINEERED POWER SOLUTIONS
1405 Spring Street, Suite 204
Paso Robles, CA 93446

FOR STRUCTURAL ELEMENTS ONLY

OSPREY POWERPLATFORM

NUANCE ENERGY
Revolutionary Solar Racking Structures

PROPRIETARY AND CONFIDENTIAL: THE INFORMATION CONTAINED HERE IN IS THE SOLE PROPERTY OF NUANCE ENERGY GROUP. INC. ANY REPRODUCTION IN PART OR WHOLE WITHOUT WRITTEN PERMISSIONIS PROHIBITED. (C) COPYRIGHT 2013. ALL RIGHTS RESERVED.

MACHINED FILLET RADII 0.38-1.27 [.015-.050]. BREAK ALL SHARP EDGES 0.2-0.8 [.01-.03] RADII OR 45°. SURFACE FINISH IN MICRO (P) INCHES (Ra). INTERPRET DRAWING PER ASME Y14.5, ASME Y14.36, AND AWS A2.4 STANDARDS.

DRAW: RODOLFO PEREIRA	03/25/2020	OSPREY POWERPLATFORM
APPROVED: LUKE ASHWORTH	03/25/2020	TITLE: Osprey PowerPlatform Portrait 2x8, Strut - 60 Cell - XHD
WEIGHT: N/A lb		MATERIAL: N/A
GENERAL TOLERANCES: DECIMALS .X ± .1, .XX ± .01, .XXX ± .005 / ANGULAR ∠ ± 1°		SIZE B / DWG NO OSP-STRUT-60CELL-2X8 - XHD / REV 02
		SCALE 1:25 / SHEET 3 OF 10

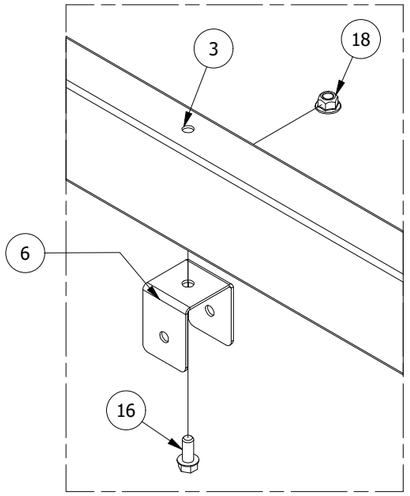

(6x) ON CHASSIS STUD

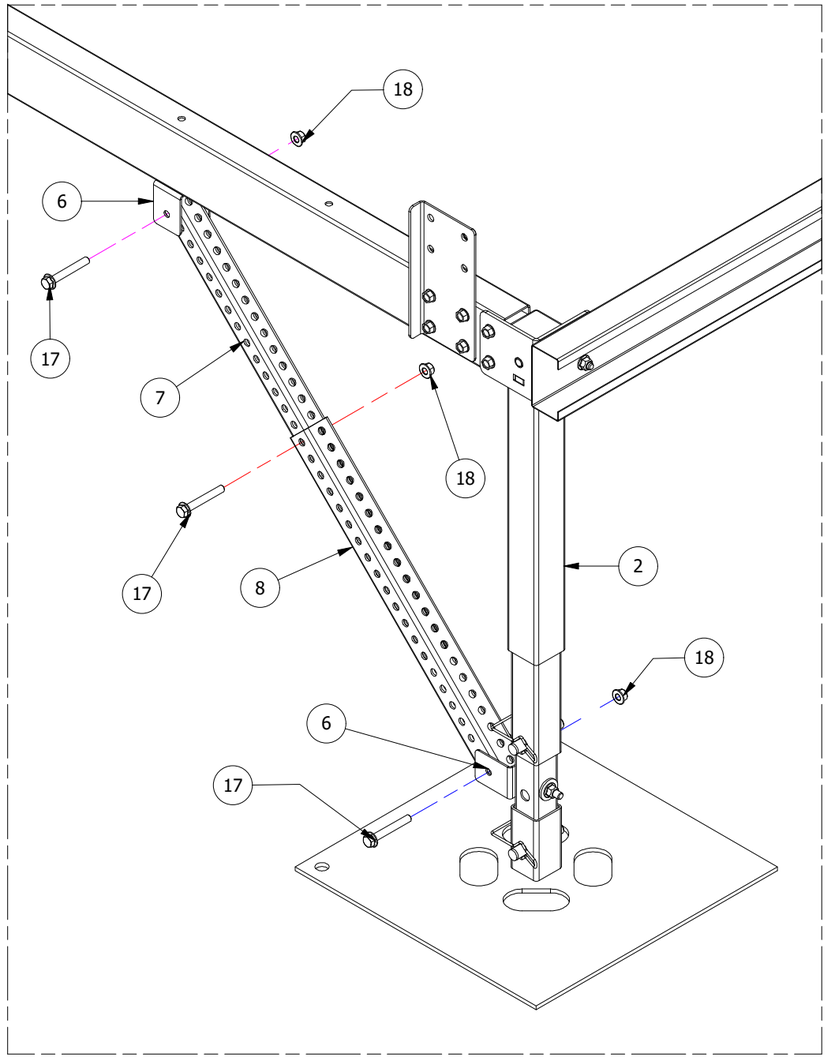

(FRONT CHASSIS) (3x)

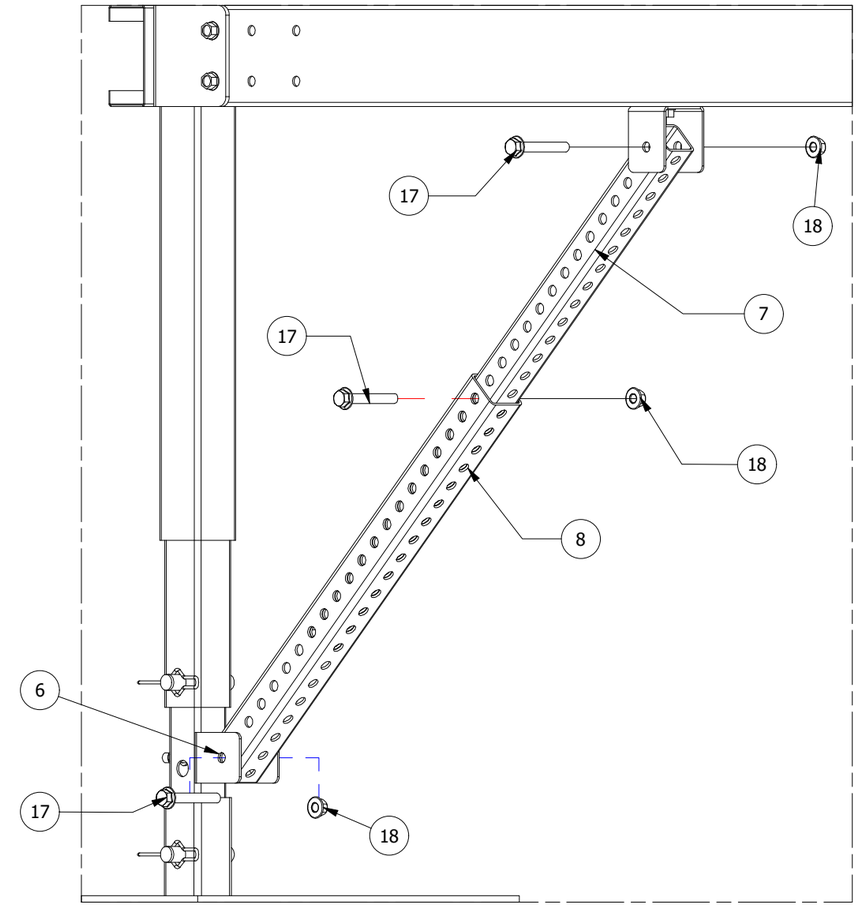

(REAR CHASSIS) (3x)

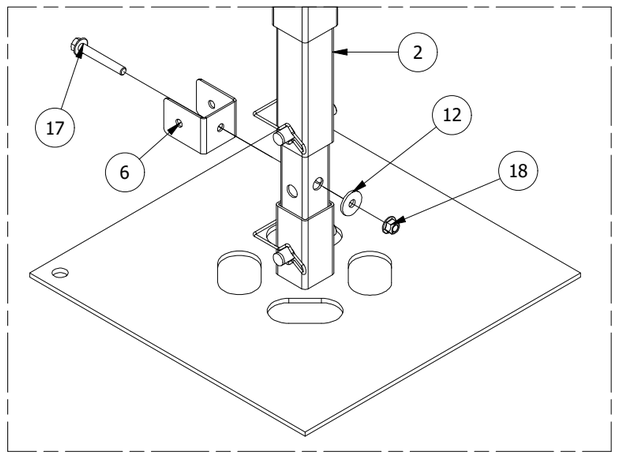

(6x) ON LEG SHOES

STAMP & SIGNATURE:

ENGINEERED POWER SOLUTIONS
1405 Spring Street, Suite 204
Paso Robles, CA 93446

FOR STRUCTURAL ELEMENTS ONLY

OSPREY POWERPLATFORM

NUANCE ENERGY
Revolutionary Solar Racking Structures

PROPRIETARY AND CONFIDENTIAL: THE INFORMATION CONTAINED HERE IN IS THE SOLE PROPERTY OF NUANCE ENERGY GROUP. INC. ANY REPRODUCTION IN PART OR WHOLE WITHOUT WRITTEN PERMISSIONIS PROHIBITED. (C) COPYRIGHT 2013. ALL RIGHTS RESERVED.

MACHINED FILLET RADII 0.38-1.27 [.015-.050]. BREAK ALL SHARP EDGES 0.2-0.8 [.01-.03] RADII OR 45°. SURFACE FINISH IN MICRO (P) INCHES (Ra). INTERPRET DRAWING PER ASME Y14.5, ASME Y14.36, AND AWS A2.4 STANDARDS.

DRAW: RODOLFO PEREIRA	03/25/2020	OSPREY POWERPLATFORM
APPROVED: LUKE ASHWORTH	03/25/2020	TITLE: Osprey PowerPlatform Portrait 2x8, Strut - 60 Cell - XHD
WEIGHT: N/A lb		MATERIAL: N/A
GENERAL TOLERANCES: DECIMALS .X ± .1, .XX ± .01, .XXX ± .005; ANGULAR ∠ ± 1°		SIZE B; DWG NO OSP-STRUT-60CELL-2X8 - XHD; REV 02
		SCALE 1:8; SHEET 4 OF 10

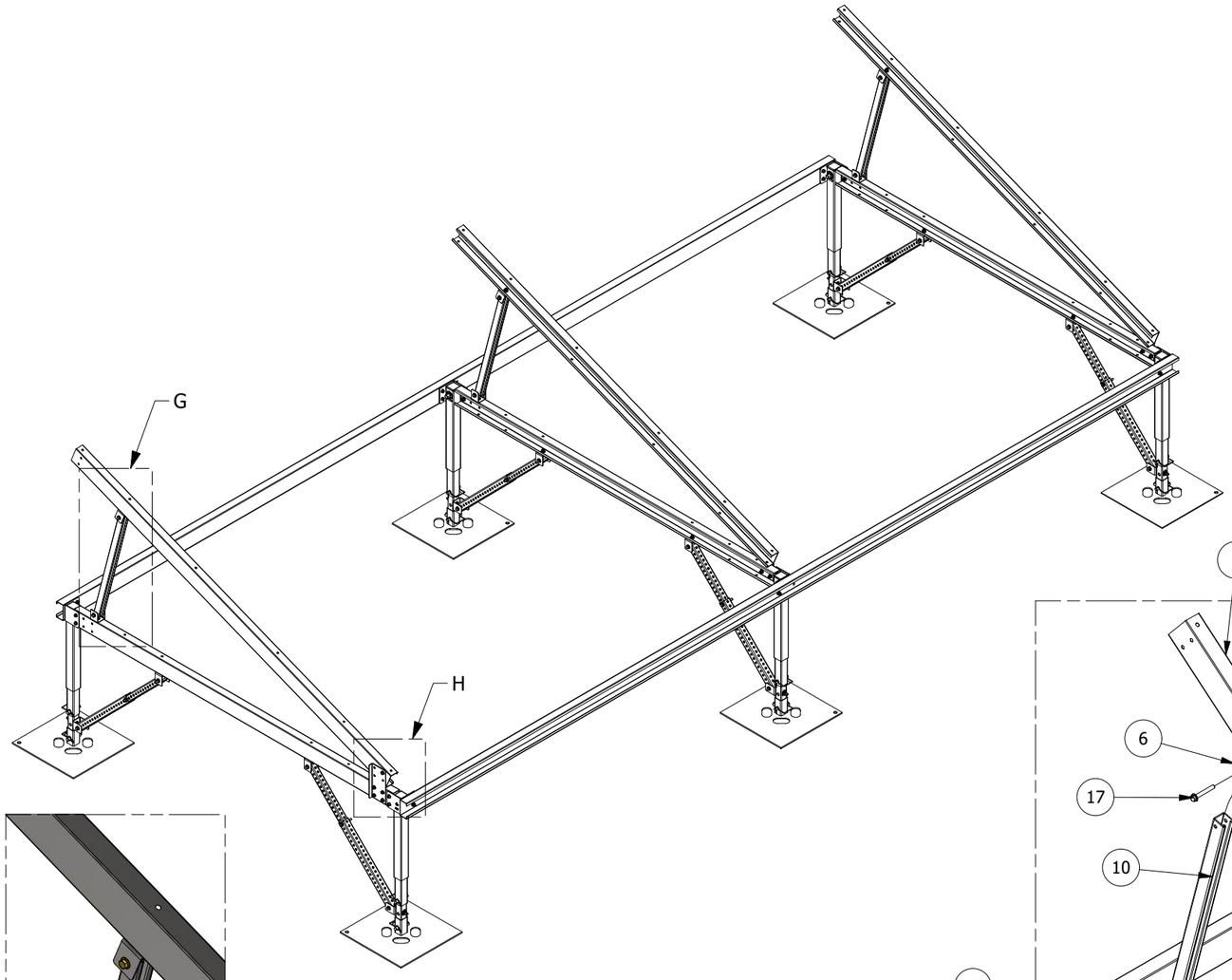

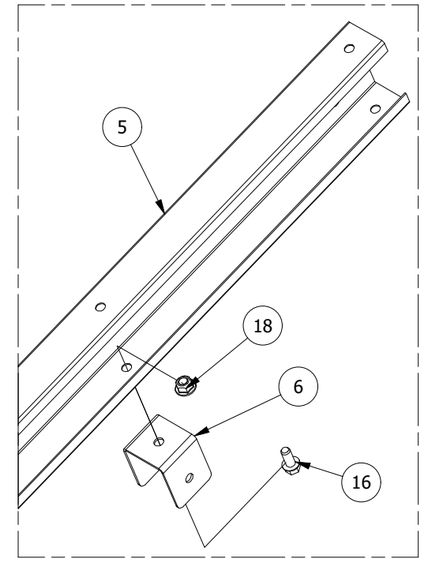

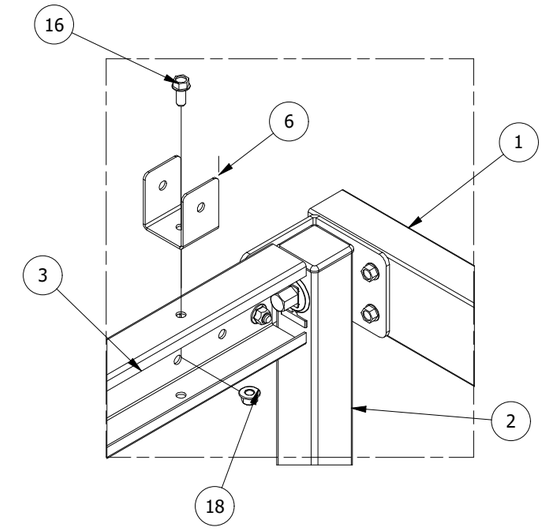

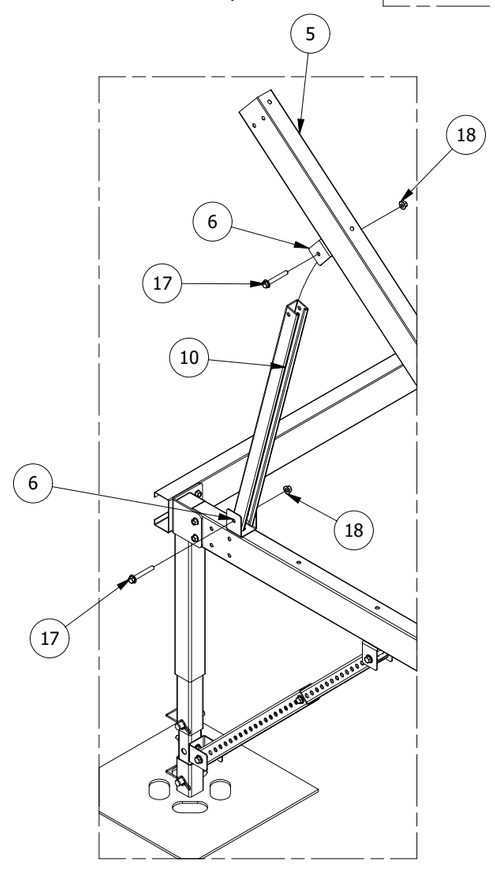

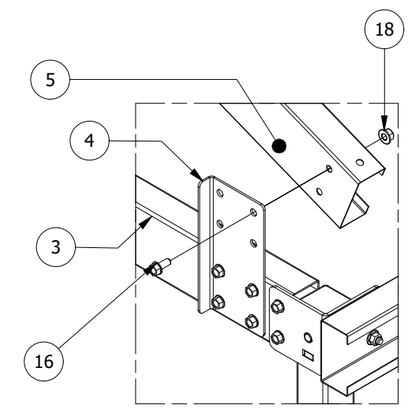

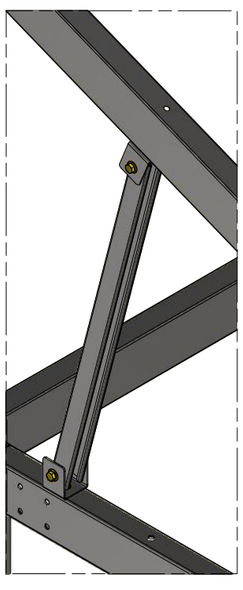

DETAIL G
SCALE 1:10

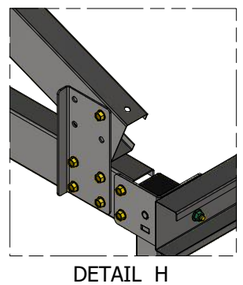

DETAIL H
SCALE 1:10

STAMP & SIGNATURE:

ENGINEERED POWER SOLUTIONS
1405 Spring Street, Suite 204
Paso Robles, CA 93446

FOR STRUCTURAL ELEMENTS ONLY

OSPREY POWERPLATFORM

NUANCE ENERGY
Revolutionary Solar Racking Structures

PROPRIETARY AND CONFIDENTIAL: THE INFORMATION CONTAINED HERE IN IS THE SOLE PROPERTY OF NUANCE ENERGY GROUP. INC. ANY REPRODUCTION IN PART OR WHOLE WITHOUT WRITTEN PERMISSIONIS PROHIBITED. (C) COPYRIGHT 2013. ALL RIGHTS RESERVED.

MACHINED FILLET RADII 0.38-1.27 [.015-.050]. BREAK ALL SHARP EDGES 0.2-0.8 [.01-.03] RADII OR 45°. SURFACE FINISH IN MICRO (P) INCHES (Ra). INTERPRET DRAWING PER ASME Y14.5, ASME Y14.36, AND AWS A2.4 STANDARDS.

DRAW: RODOLFO PEREIRA	03/25/2020	OSPREY POWERPLATFORM
APPROVED: LUKE ASHWORTH	03/25/2020	TITLE: Osprey PowerPlatform Portrait 2x8, Strut - 60 Cell - XHD
WEIGHT: N/A lb		MATERIAL: N/A
GENERAL TOLERANCES: DECIMALS .X ± .1, .XX ± .01, .XXX ± .005; ANGULAR ∠ ± 1°		SIZE B; DWG NO OSP-STRUT-60CELL-2X8 - XHD; REV 02; SCALE 1:30; SHEET 5 OF 10

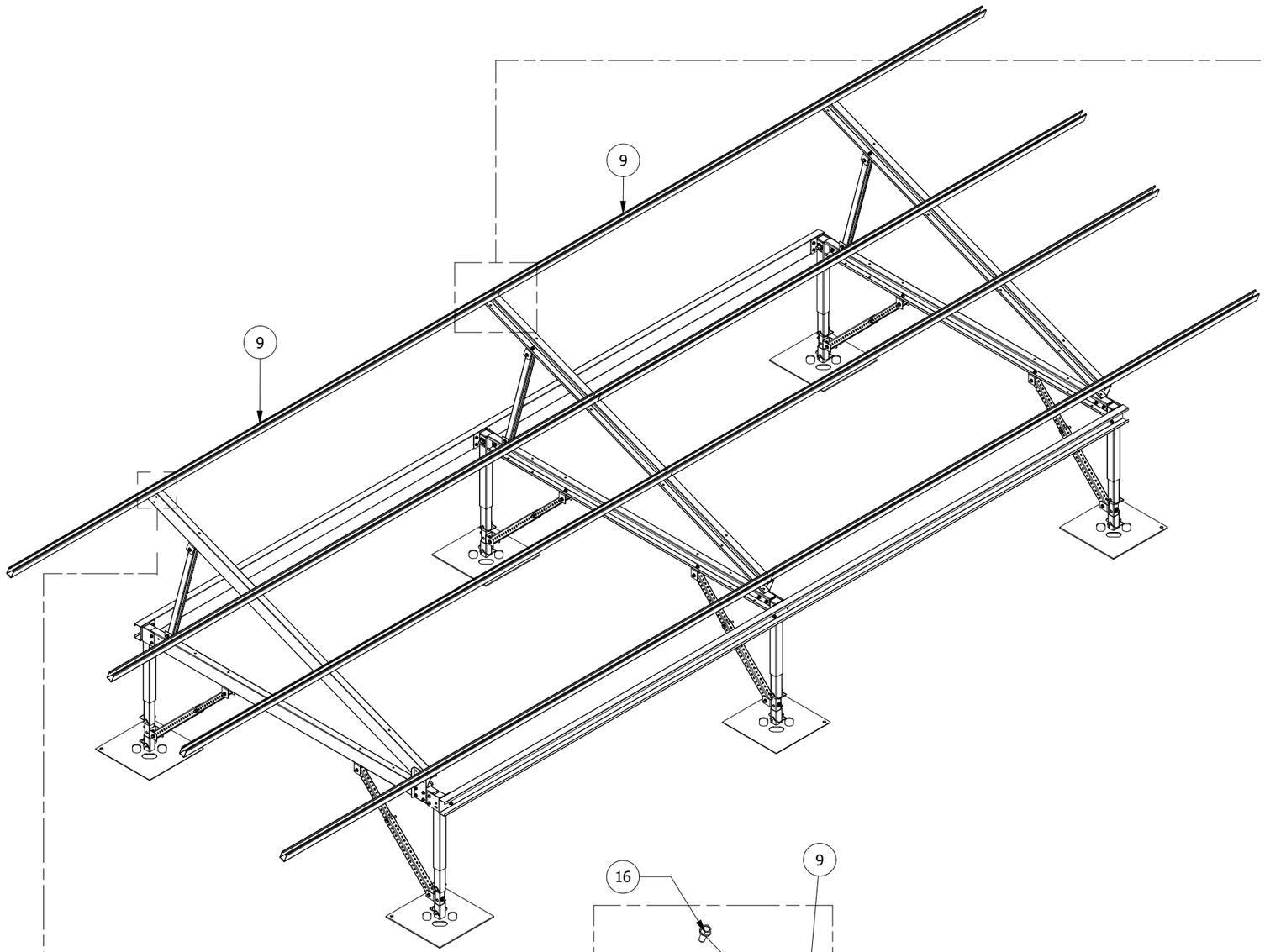

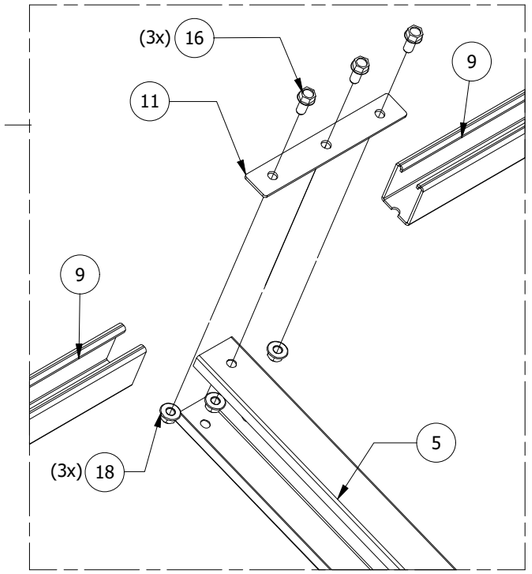

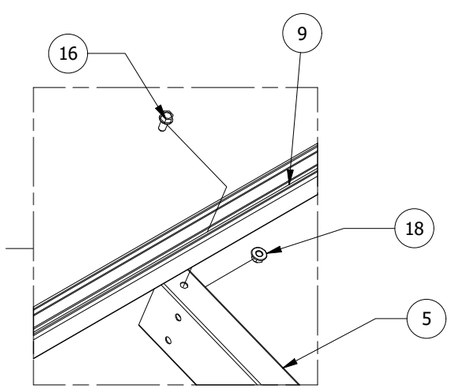

STAMP & SIGNATURE:

ENGINEERED POWER SOLUTIONS
1405 Spring Street, Suite 204
Paso Robles, CA 93446

FOR STRUCTURAL ELEMENTS ONLY

OSPREY POWERPLATFORM

NUANCE ENERGY
Revolutionary Solar Racking Structures

PROPRIETARY AND CONFIDENTIAL: THE INFORMATION CONTAINED HERE IN IS THE SOLE PROPERTY OF NUANCE ENERGY GROUP. INC. ANY REPRODUCTION IN PART OR WHOLE WITHOUT WRITTEN PERMISSIONIS PROHIBITED. (C) COPYRIGHT 2013. ALL RIGHTS RESERVED.

MACHINED FILLET RADII 0.38-1.27 [.015-.050]. BREAK ALL SHARP EDGES 0.2-0.8 [.01-.03] RADII OR 45°. SURFACE FINISH IN MICRO (P) INCHES (Ra). INTERPRET DRAWING PER ASME Y14.5, ASME Y14.36, AND AWS A2.4 STANDARDS.

DRAW: RODOLFO PEREIRA	03/25/2020	OSPREY POWERPLATFORM
APPROVED: LUKE ASHWORTH	03/25/2020	TITLE: Osprey PowerPlatform Portrait 2x8, Strut - 60 Cell - XHD
WEIGHT: N/A lb		MATERIAL: N/A
GENERAL TOLERANCES: DECIMALS .X ± .1, .XX ± .01, .XXX ± .005; ANGULAR ∠ ± 1°		SIZE B; DWG NO OSP-STRUT-60CELL-2X8 - XHD; REV 02
		SCALE 1:30; SHEET 6 OF 10

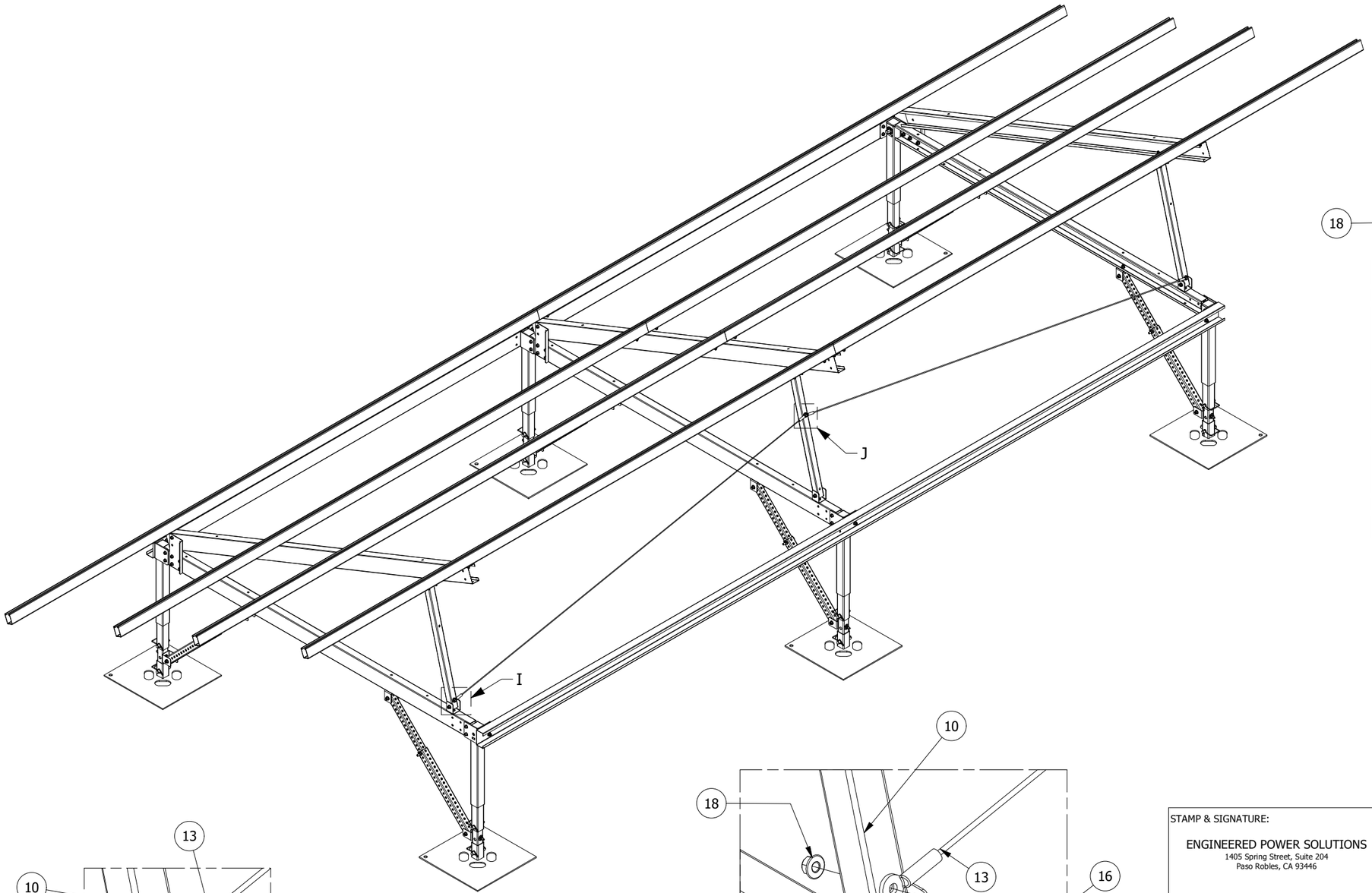

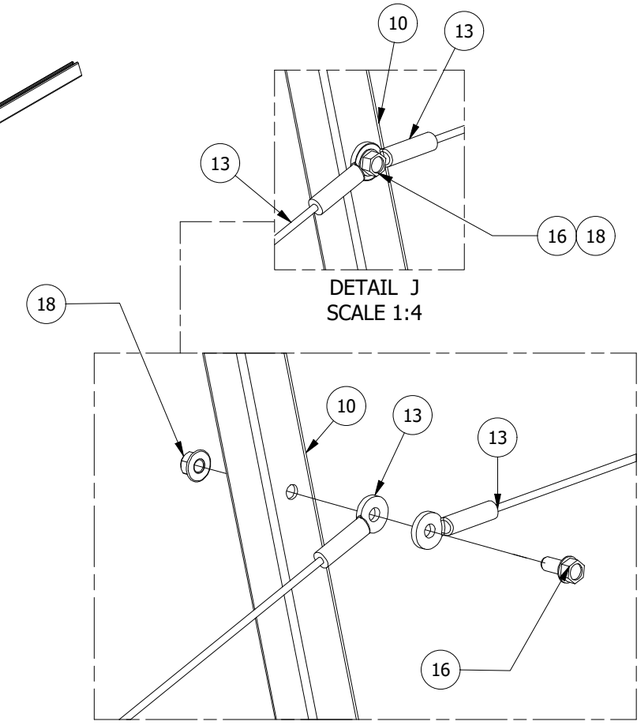

DETAIL J
SCALE 1:4

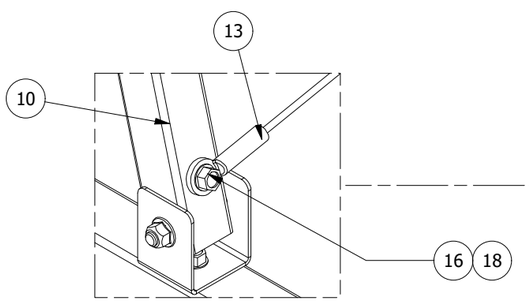

DETAIL I
SCALE 1:4

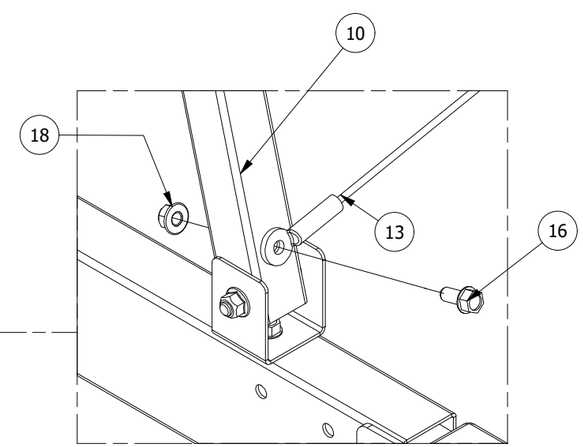

CABLE BRACE MOUNTING (CORNERS)

STAMP & SIGNATURE:

ENGINEERED POWER SOLUTIONS
1405 Spring Street, Suite 204
Paso Robles, CA 93446

FOR STRUCTURAL ELEMENTS ONLY

OSPREY POWERPLATFORM

NUANCE ENERGY
Revolutionary Solar Racking Structures

PROPRIETARY AND CONFIDENTIAL: THE INFORMATION CONTAINED HERE IN IS THE SOLE PROPERTY OF NUANCE ENERGY GROUP. INC. ANY REPRODUCTION IN PART OR WHOLE WITHOUT WRITTEN PERMISSIONIS PROHIBITED. (C) COPYRIGHT 2013. ALL RIGHTS RESERVED.

MACHINED FILLET RADII 0.38-1.27 [.015-.050]. BREAK ALL SHARP EDGES 0.2-0.8 [.01-.03] RADII OR 45°. SURFACE FINISH IN MICRO (P) INCHES (Ra). INTERPRET DRAWING PER ASME Y14.5, ASME Y14.36, AND AWS A2.4 STANDARDS.

DRAW: RODOLFO PEREIRA	03/25/2020	OSPREY POWERPLATFORM
APPROVED: LUKE ASHWORTH	03/25/2020	TITLE: Osprey PowerPlatform Portrait 2x8, Strut - 60 Cell - XHD
WEIGHT: N/A lb		MATERIAL: N/A
GENERAL TOLERANCES: DECIMALS .X ± .1, .XX ± .01, .XXX ± .005 / ANGULAR ∠ ± 1°		SIZE B / DWG NO OSP-STRUT-60CELL-2X8 - XHD / REV 02
		SCALE 1:25 / SHEET 7 OF 10

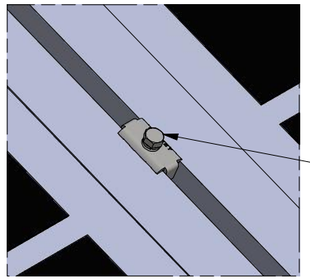

DETAIL L
SCALE 1:4

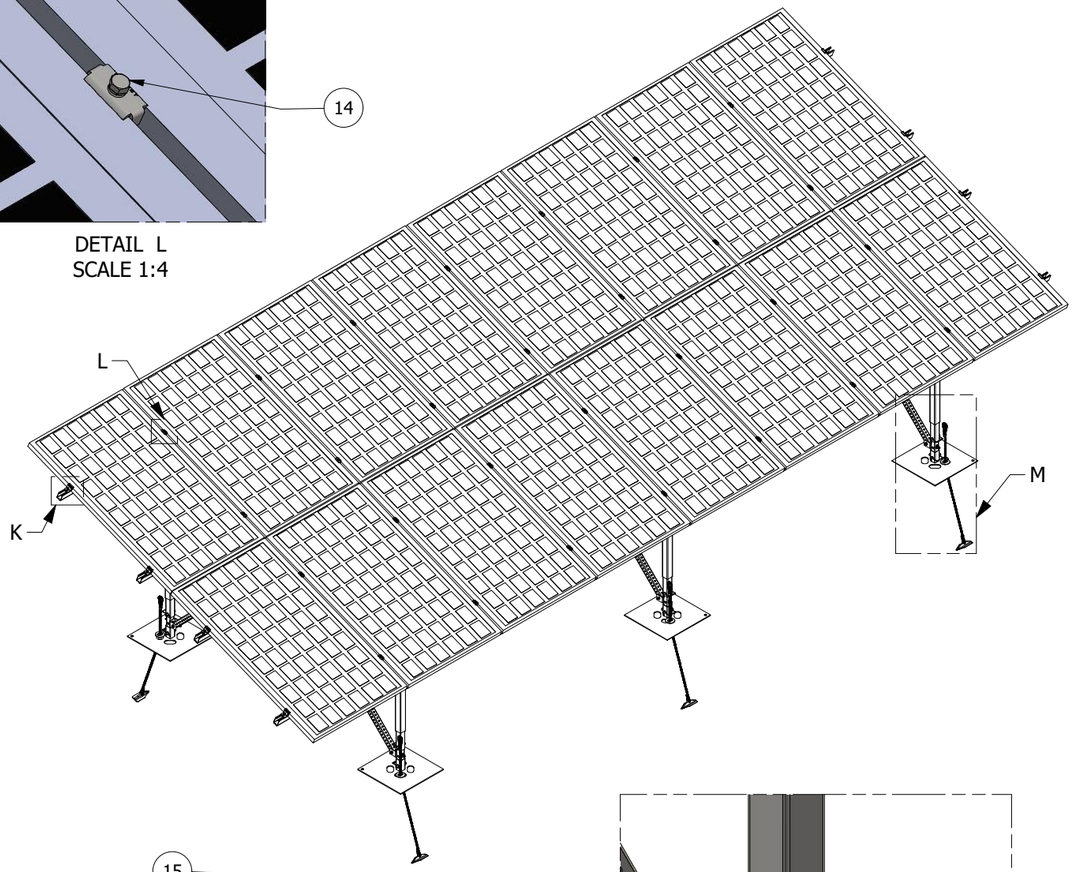

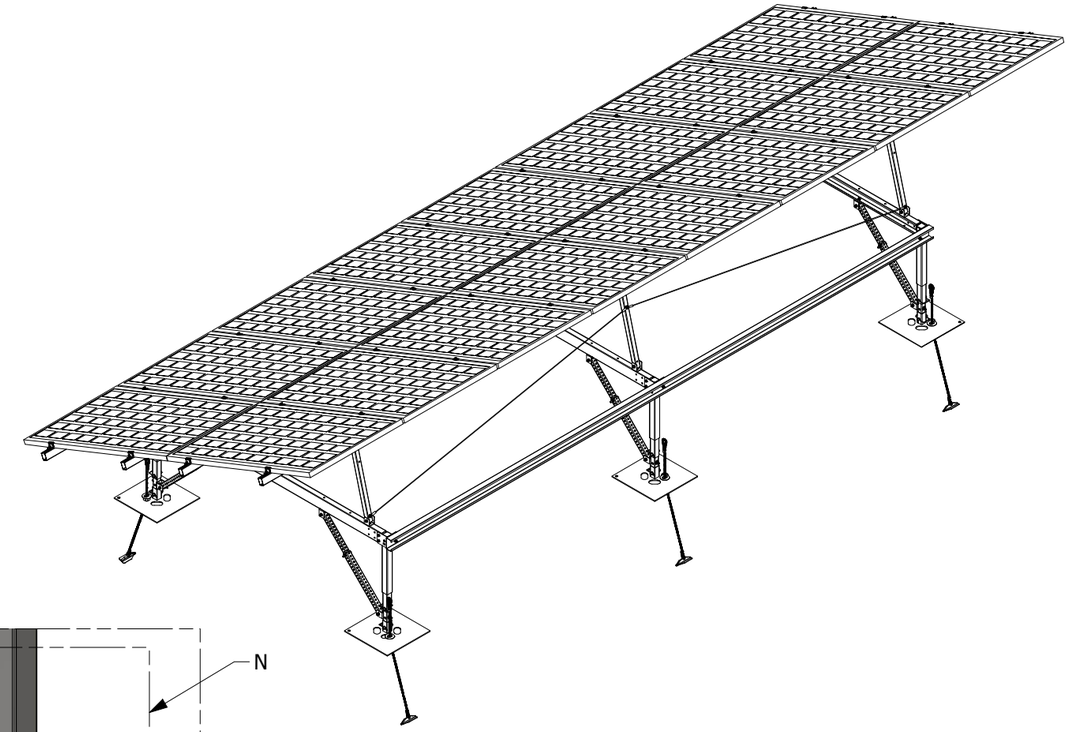

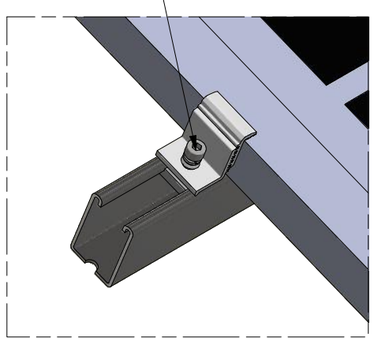

DETAIL K
SCALE 1:4

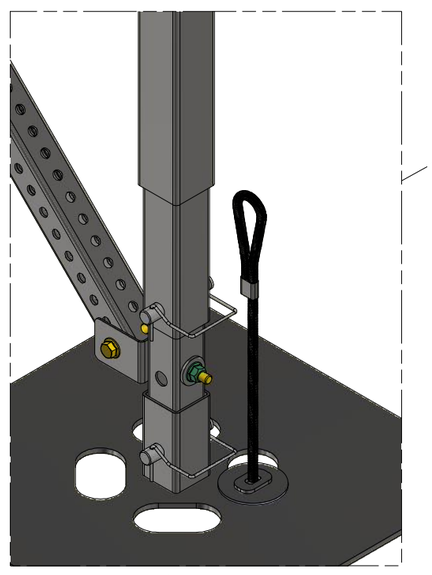

DETAIL N (ANCHOR DETAIL)
SCALE 1:6

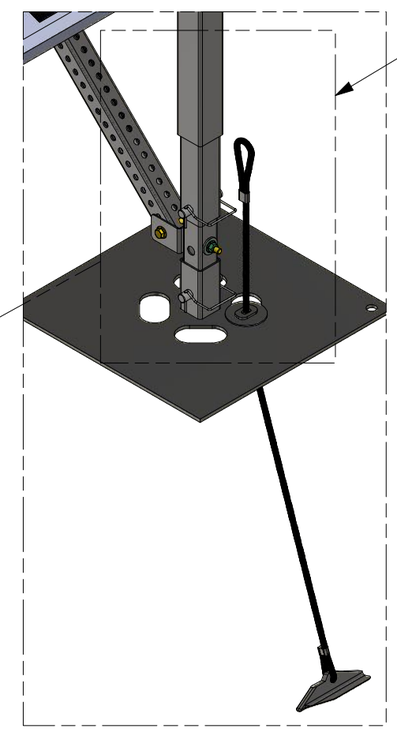

DETAIL M (Typ. 6x - 180º)
SCALE 1:10

STAMP & SIGNATURE:

ENGINEERED POWER SOLUTIONS
1405 Spring Street, Suite 204
Paso Robles, CA 93446

FOR STRUCTURAL ELEMENTS ONLY

OSPREY POWERPLATFORM

NUANCE ENERGY
Revolutionary Solar Racking Structures

PROPRIETARY AND CONFIDENTIAL: THE INFORMATION CONTAINED HERE IN IS THE SOLE PROPERTY OF NUANCE ENERGY GROUP. INC. ANY REPRODUCTION IN PART OR WHOLE WITHOUT WRITTEN PERMISSIONIS PROHIBITED. (C) COPYRIGHT 2013. ALL RIGHTS RESERVED.

MACHINED FILLET RADII 0.38-1.27 [.015-.050]. BREAK ALL SHARP EDGES 0.2-0.8 [.01-.03] RADII OR 45°. SURFACE FINISH IN MICRO (P) INCHES (Ra). INTERPRET DRAWING PER ASME Y14.5, ASME Y14.36, AND AWS A2.4 STANDARDS.

DRAW: RODOLFO PEREIRA	03/25/2020	OSPREY POWERPLATFORM
APPROVED: LUKE ASHWORTH	03/25/2020	TITLE: Osprey PowerPlatform Portrait 2x8, Strut - 60 Cell - XHD
WEIGHT: N/A lb		
GENERAL TOLERANCES: DECIMALS .X ± .1, .XX ± .01, .XXX ± .005; ANGULAR ∠ ± 1º		MATERIAL: N/A
		SIZE B; DWG NO OSP-STRUT-60CELL-2X8 - XHD; REV 02
		SCALE 1:45; SHEET 8 OF 10

(THERMAL EXPANSION GAP NEEDED AFTER 5 OSPREY CONNECTED TOGETHER)

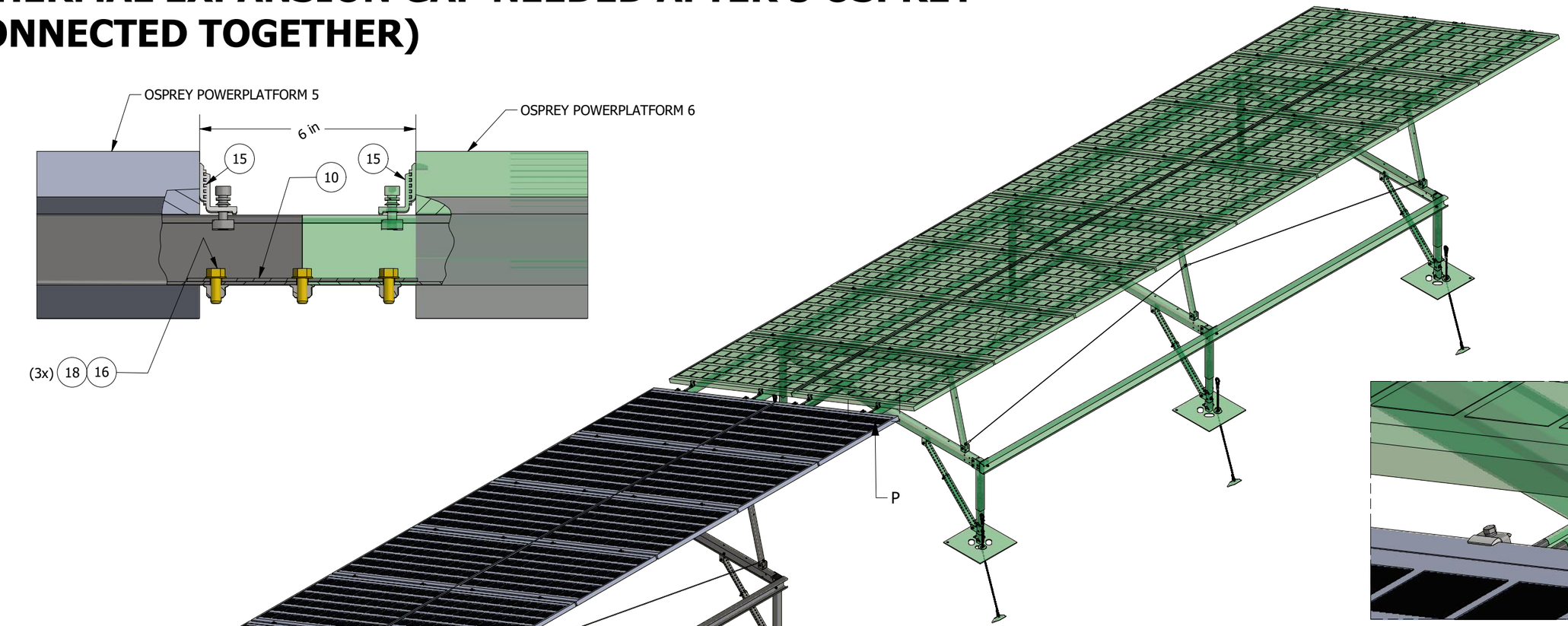

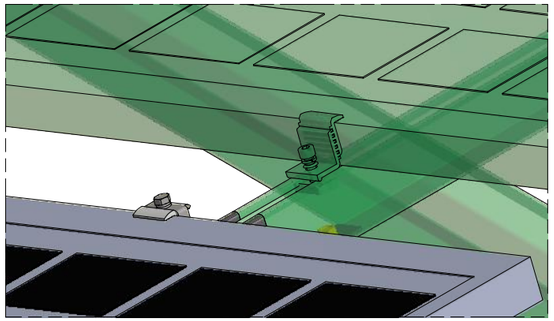

DETAIL P
SCALE 1:5

OSPREY POWER PLATFORM 6

AFTER 5th OSPREY POWERPLATFORM CREATE EXPANSION GAP

STAMP & SIGNATURE:

ENGINEERED POWER SOLUTIONS
1405 Spring Street, Suite 204
Paso Robles, CA 93446

FOR STRUCTURAL ELEMENTS ONLY

OSPREY POWERPLATFORM

NUANCE ENERGY
Revolutionary Solar Racking Structures

PROPRIETARY AND CONFIDENTIAL: THE INFORMATION CONTAINED HERE IN IS THE SOLE PROPERTY OF NUANCE ENERGY GROUP. INC. ANY REPRODUCTION IN PART OR WHOLE WITHOUT WRITTEN PERMISSIONIS PROHIBITED. (C) COPYRIGHT 2013. ALL RIGHTS RESERVED.

MACHINED FILLET RADII 0.38-1.27 [.015-.050]. BREAK ALL SHARP EDGES 0.2-0.8 [.01-.03] RADII OR 45°. SURFACE FINISH IN MICRO (P) INCHES (Ra). INTERPRET DRAWING PER ASME Y14.5, ASME Y14.36, AND AWS A2.4 STANDARDS.

DRAW: RODOLFO PEREIRA	03/25/2020	OSPREY POWERPLATFORM
APPROVED: LUKE ASHWORTH	03/25/2020	TITLE: Osprey PowerPlatform Portrait 2x8, Strut - 60 Cell - XHD
WEIGHT: N/A lb		
GENERAL TOLERANCES: DECIMALS .X ± .1, .XX ± .01, .XXX ± .005; ANGULAR ∠ ± 1°		MATERIAL: N/A
		SIZE B; DWG NO OSP-STRUT-60CELL-2X8 - XHD; REV 02
		SCALE 1:40; SHEET 9 OF 10

(THERMAL EXPANSION GAP NEEDED CONNECTED TOGETHER)

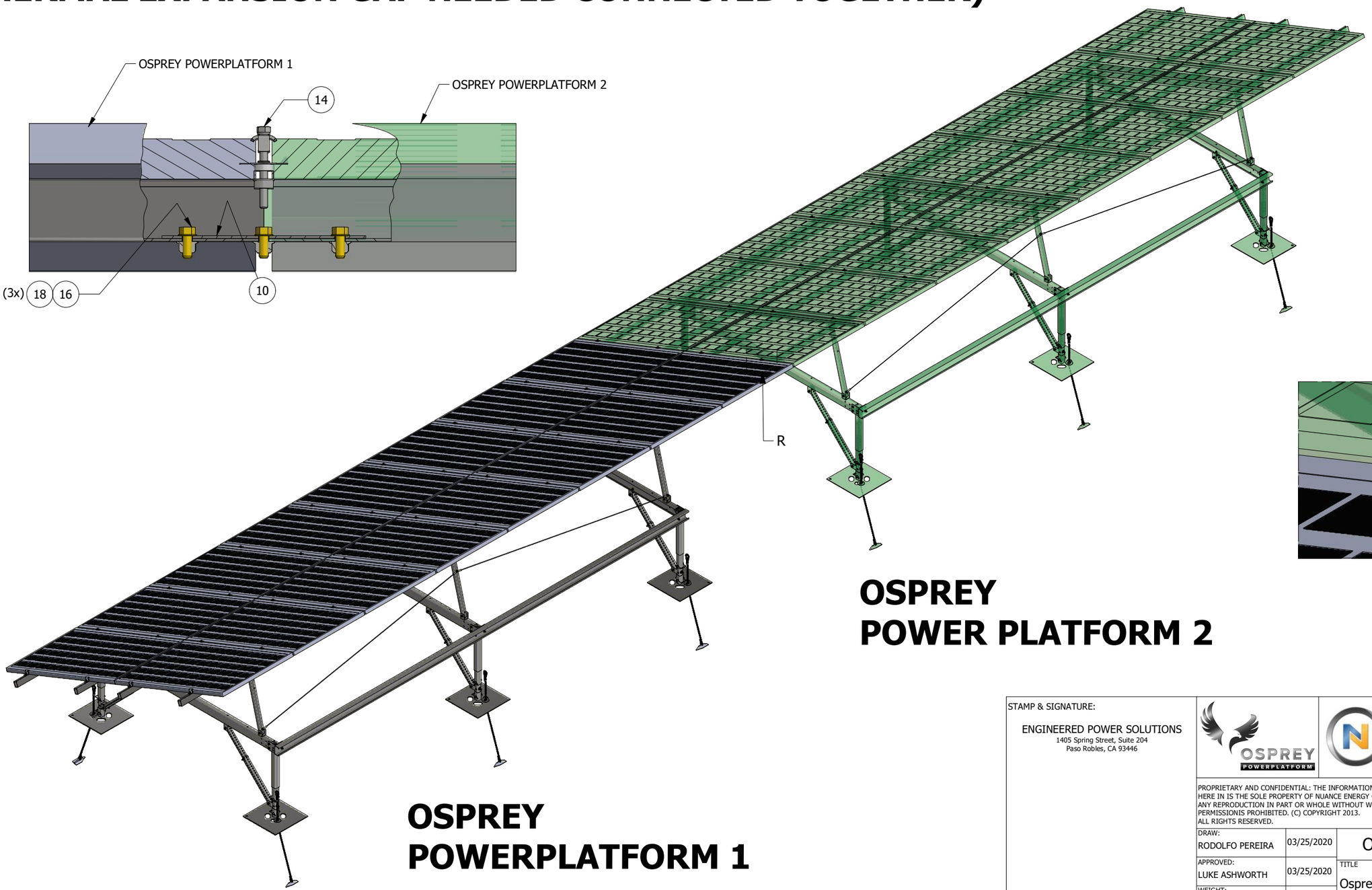

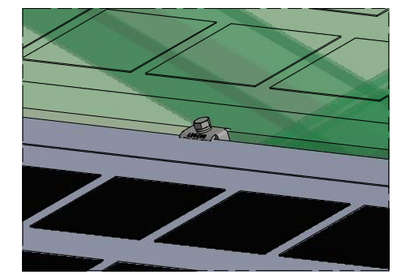

DETAIL R
SCALE 1:5

OSPREY
POWER PLATFORM 2

OSPREY
POWERPLATFORM 1

STAMP & SIGNATURE:

ENGINEERED POWER SOLUTIONS
1405 Spring Street, Suite 204
Paso Robles, CA 93446

FOR STRUCTURAL ELEMENTS ONLY

OSPREY POWERPLATFORM

NUANCE ENERGY
Revolutionary Solar Racking Structures

PROPRIETARY AND CONFIDENTIAL: THE INFORMATION CONTAINED HERE IN IS THE SOLE PROPERTY OF NUANCE ENERGY GROUP. INC. ANY REPRODUCTION IN PART OR WHOLE WITHOUT WRITTEN PERMISSIONIS PROHIBITED. (C) COPYRIGHT 2013. ALL RIGHTS RESERVED.

MACHINED FILLET RADII 0.38-1.27 [.015-.050]. BREAK ALL SHARP EDGES 0.2-0.8 [.01-.03] RADII OR 45°. SURFACE FINISH IN MICRO (P) INCHES (Ra). INTERPRET DRAWING PER ASME Y14.5, ASME Y14.36, AND AWS A2.4 STANDARDS.

DRAW: RODOLFO PEREIRA	03/25/2020	OSPREY POWERPLATFORM
APPROVED: LUKE ASHWORTH	03/25/2020	TITLE: Osprey PowerPlatform Portrait 2x8, Strut - 60 Cell - XHD
WEIGHT: N/A lb		MATERIAL: N/A
GENERAL TOLERANCES: DECIMALS .X ± .1, .XX ± .01, .XXX ± .005; ANGULAR ∠ ± 1°		SIZE B; DWG NO OSP-STRUT-60CELL-2X8 - XHD; REV 02
		SCALE 1:40; SHEET 10 OF 10