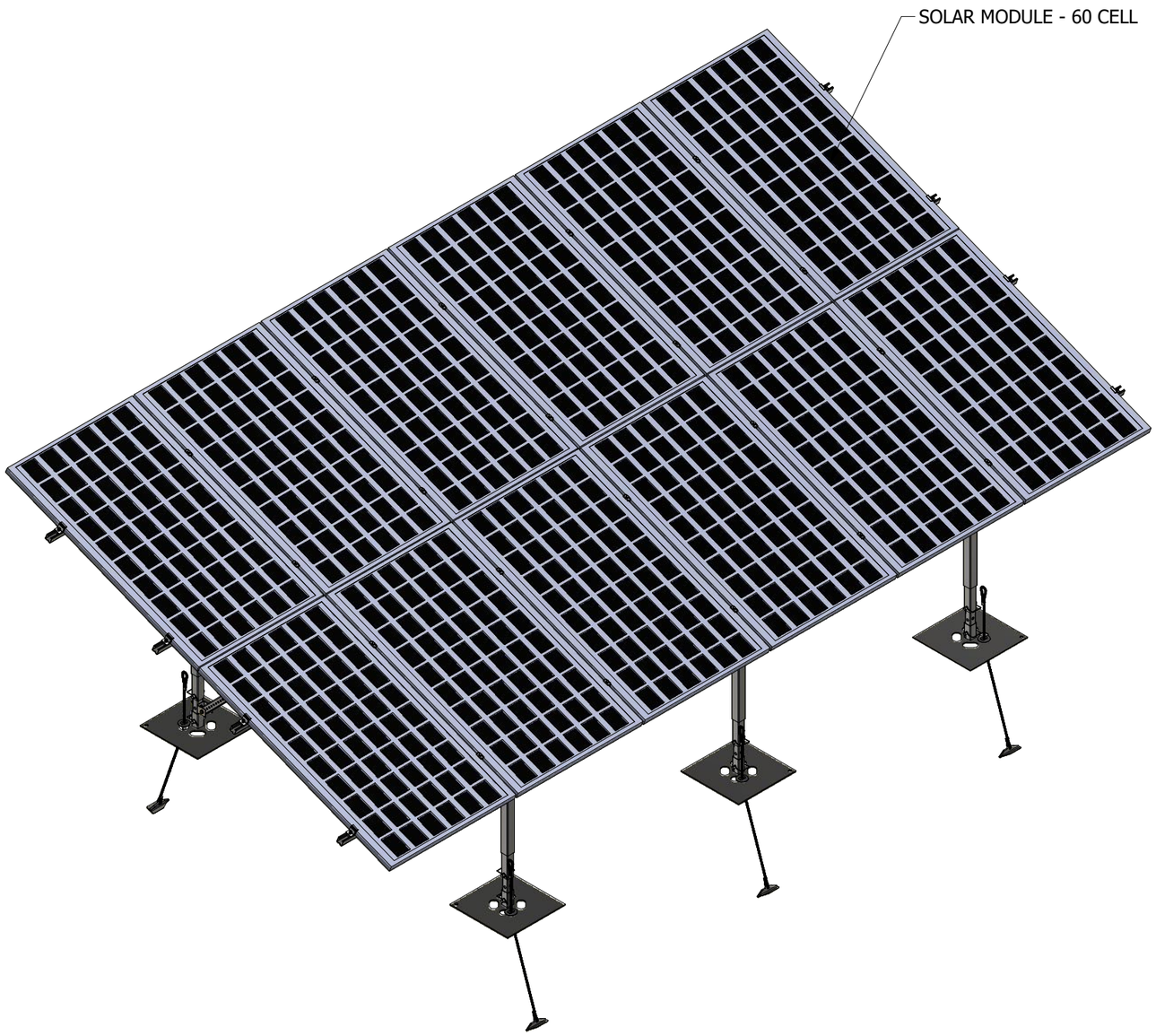


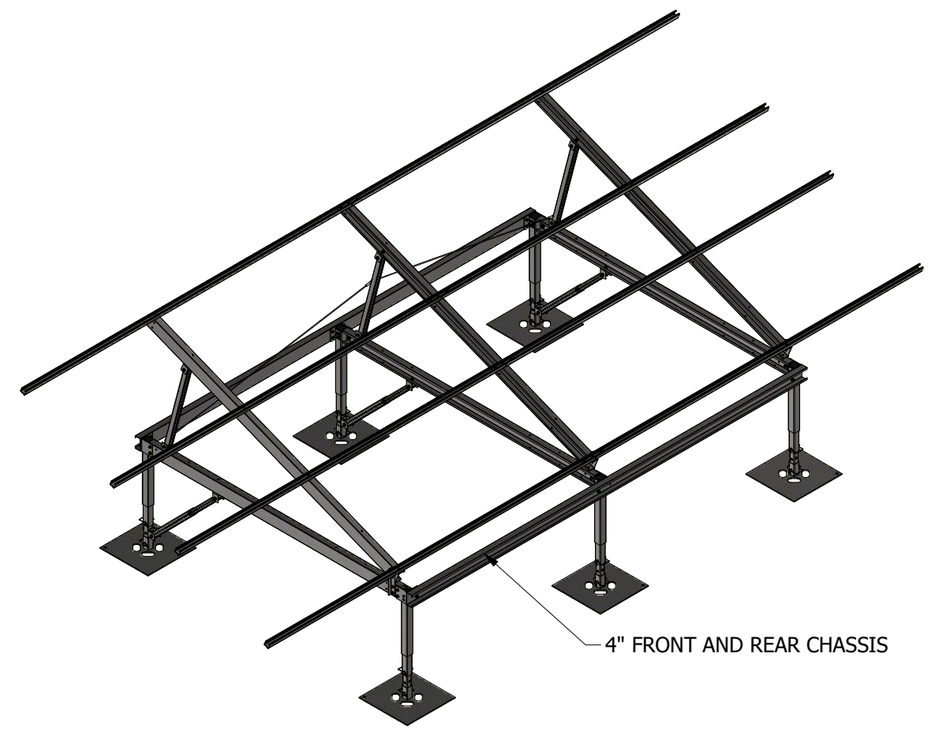


STAMP & SIGNATURE:

ENGINEERED POWER SOLUTIONS
1405 Spring Street, Suite 204
Paso Robles, CA 93446

FOR STRUCTURAL ELEMENTS ONLY

OSPREY POWERPLATFORM

NUANCE ENERGY
Revolutionary Solar Racking Structures

PROPRIETARY AND CONFIDENTIAL: THE INFORMATION CONTAINED HERE IN IS THE SOLE PROPERTY OF NUANCE ENERGY GROUP. INC. ANY REPRODUCTION IN PART OR WHOLE WITHOUT WRITTEN PERMISSIONIS PROHIBITED. (C) COPYRIGHT 2013. ALL RIGHTS RESERVED.

MACHINED FILLET RADII 0.38-1.27 [.015-.050]. BREAK ALL SHARP EDGES 0.2-0.8 [.01-.03] RADII OR 45°. SURFACE FINISH IN MICRO (P) INCHES (Ra). INTERPRET DRAWING PER ASME Y14.5, ASME Y14.36, AND AWS A2.4 STANDARDS.

| | | |
|---|---|---|
| DRAW: RODOLFO PEREIRA | 03/25/2020 | OSPREY POWERPLATFORM |
| APPROVED: LUKE ASHWORTH | 03/25/2020 | TITLE: Osprey PowerPlatform Portrait 2x6, Strut - 60 Cell - STD |
| WEIGHT: N/A lb | | |
| GENERAL TOLERANCES: DECIMALS .X ± .1, .XX ± .01, .XXX ± .005; ANGULAR ∠ ± 1° | | MATERIAL: N/A |
| | | SIZE B; DWG NO OSP-STRUT-60CELL-2X6 - STD; REV 02 |
| | | SCALE 1:30; SHEET 1 OF 10 |

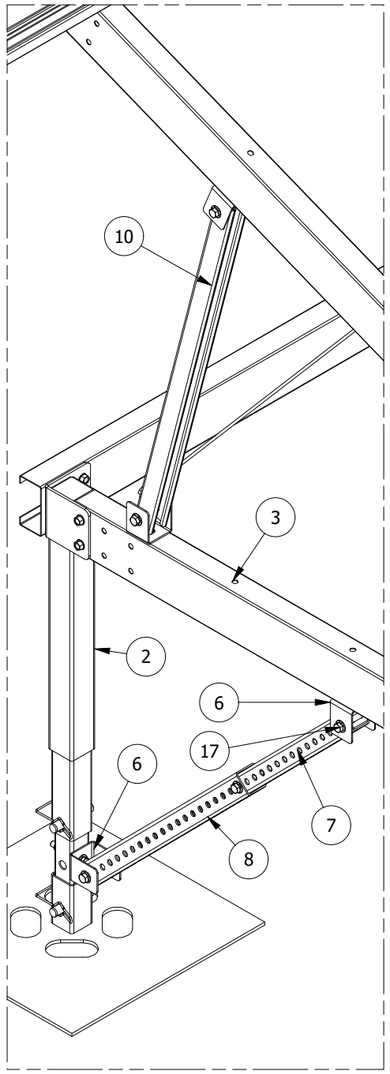


DETAIL A (3x)
SCALE 1:10

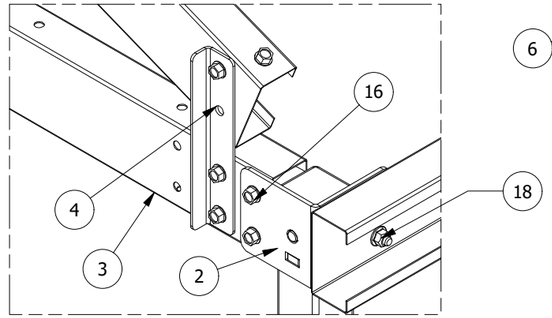


DETAIL B (3x)
SCALE 1:6

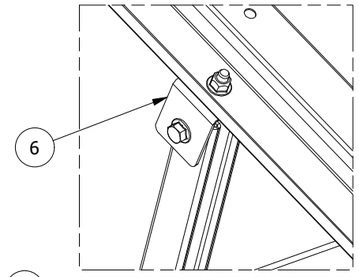


DETAIL C
SCALE 1:5

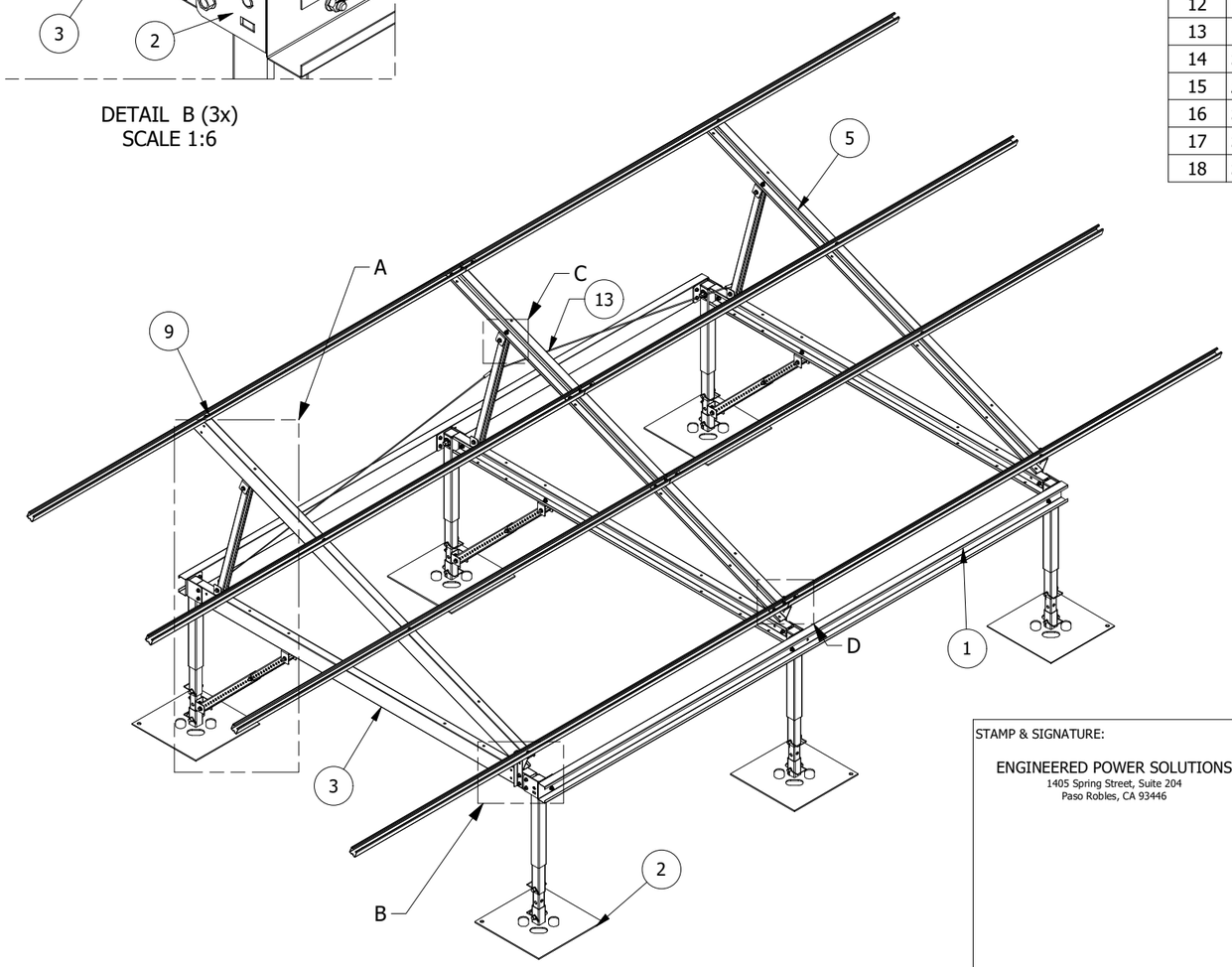


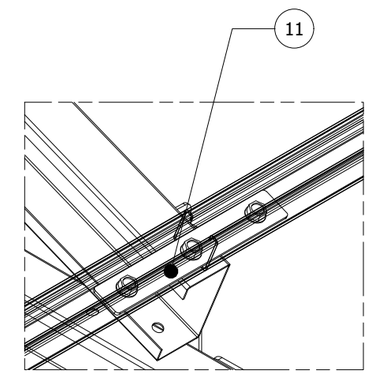


DETAIL D
SCALE 1:5

PARTS LIST

| ITEM | DESCRIPTION | QTY |
|---|---|---|
| 1 | FRONT AND REAR CHASSIS STUD - STRUT - 72-60 CELL - OSP - 2x6 | 2 |
| 2 | POWER ADJUSTABLE LEG | 6 |
| 3 | CHASSIS STUD - USA 60 CELL STD - G90 2019-09-05 | 3 |
| 4 | RACK MOUNTING BRACKET - 2 HOLE | 3 |
| 5 | -STRONGBACK-STRUT60 | 3 |
| 6 | BACK BRACE BRACKET | 12 |
| 7 | TELESCOPIC TUBING 1.50 x 1.50 | 3 |
| 8 | TELESCOPIC TUBING 1.75 x 1.75 | 3 |
| 9 | STRUT RAIL 2x6 STD 1.63 x 1.63 14GA 80KSI | 8 |
| 10 | BACK BRACE - AS DRAWING 402-009 | 3 |
| 11 | STRUT SPLICE PLATE | 4 |
| 12 | FENDER WASHER | 3 |
| 13 | 1/8" CABLE BRACE 2X6 AS DRAWING | 2 |
| 14 | SELF-BONDING MID CLAMP | 20 |
| 15 | ADJUSTABLE END CLAMP | 8 |
| 16 | SERRATED FLANGE BOLT - 3/8"-16 x 1" - [514-008-01] | 65 |
| 17 | SERRATED FLANGE BOLT 3/8"-16 x 2.5" - [514-007-01] | 18 |
| 18 | SERRATED FLANGE NUT -3/8"-16 [514-006-01] | 83 |

STAMP & SIGNATURE:

ENGINEERED POWER SOLUTIONS
1405 Spring Street, Suite 204
Paso Robles, CA 93446

FOR STRUCTURAL ELEMENTS ONLY

OSPREY POWERPLATFORM

NUANCE ENERGY
Revolutionary Solar Racking Structures

PROPRIETARY AND CONFIDENTIAL: THE INFORMATION CONTAINED HERE IN IS THE SOLE PROPERTY OF NUANCE ENERGY GROUP. INC. ANY REPRODUCTION IN PART OR WHOLE WITHOUT WRITTEN PERMISSIONIS PROHIBITED. (C) COPYRIGHT 2013. ALL RIGHTS RESERVED.

MACHINED FILLET RADII 0.38-1.27 [.015-.050]. BREAK ALL SHARP EDGES 0.2-0.8 [.01-.03] RADII OR 45°. SURFACE FINISH IN MICRO (P) INCHES (Ra). INTERPRET DRAWING PER ASME Y14.5, ASME Y14.36, AND AWS A2.4 STANDARDS.

| | | |
|---|---|---|
| DRAW: RODOLFO PEREIRA | 03/25/2020 | OSPREY POWERPLATFORM |
| APPROVED: LUKE ASHWORTH | 03/25/2020 | TITLE: Osprey PowerPlatform Portrait 2x6, Strut - 60 Cell - STD |
| WEIGHT: N/A lb | | |
| GENERAL TOLERANCES: DECIMALS .X ± .1, .XX ± .01, .XXX ± .005; ANGULAR ∠ ± 1° | | MATERIAL: N/A |
| | | SIZE B; DWG NO OSP-STRUT-60CELL-2X6 - STD; REV 02 |
| | | SCALE 1:30; SHEET 2 OF 10 |

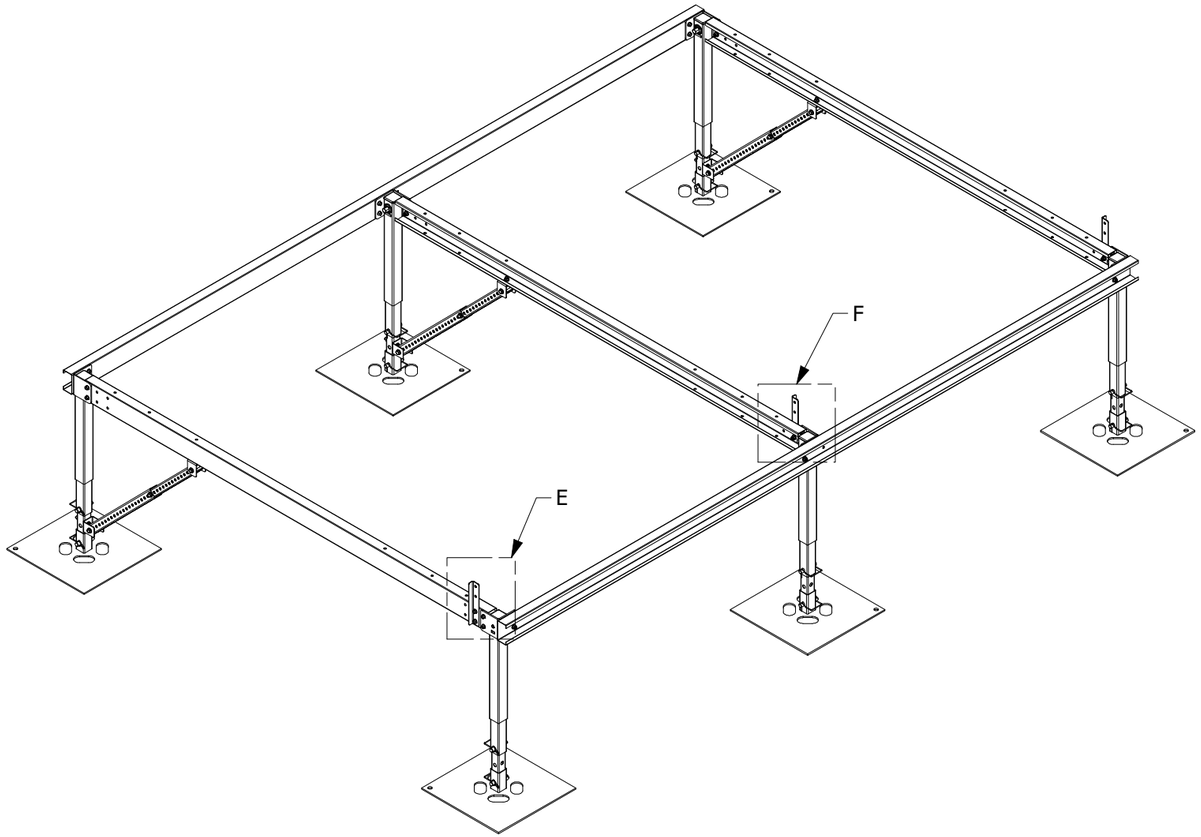


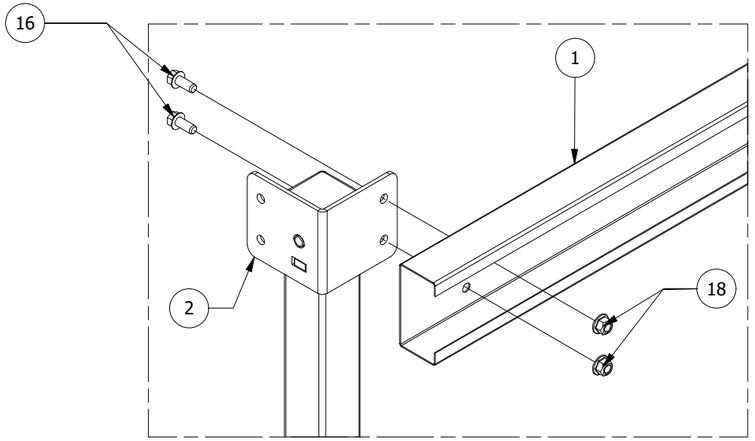


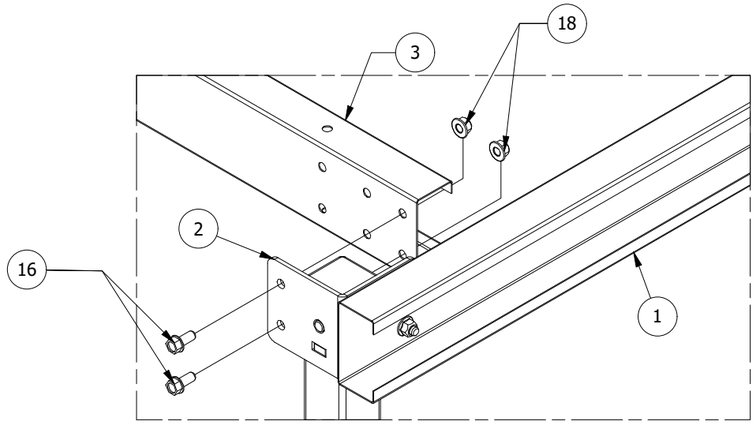


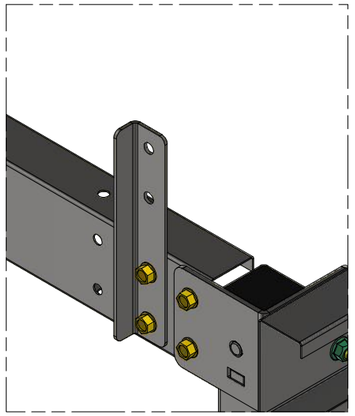

DETAIL E
SCALE 1:5

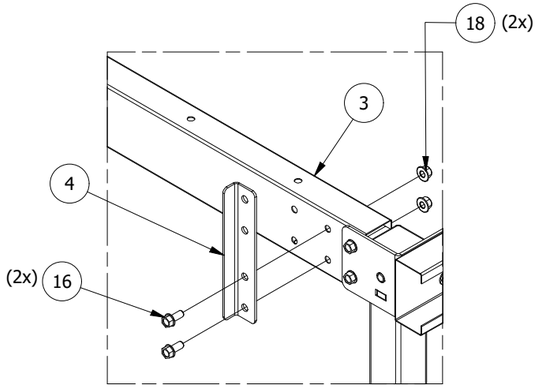


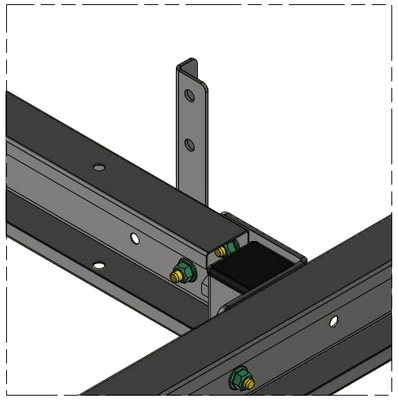

DETAIL F
SCALE 1:5

STAMP & SIGNATURE:

ENGINEERED POWER SOLUTIONS
1405 Spring Street, Suite 204
Paso Robles, CA 93446

FOR STRUCTURAL ELEMENTS ONLY

OSPREY POWERPLATFORM

NUANCE ENERGY
Revolutionary Solar Racking Structures

PROPRIETARY AND CONFIDENTIAL: THE INFORMATION CONTAINED HERE IN IS THE SOLE PROPERTY OF NUANCE ENERGY GROUP. INC. ANY REPRODUCTION IN PART OR WHOLE WITHOUT WRITTEN PERMISSIONIS PROHIBITED. (C) COPYRIGHT 2013. ALL RIGHTS RESERVED.

MACHINED FILLET RADII 0.38-1.27 [.015-.050]. BREAK ALL SHARP EDGES 0.2-0.8 [.01-.03] RADII OR 45°. SURFACE FINISH IN MICRO (P) INCHES (Ra). INTERPRET DRAWING PER ASME Y14.5, ASME Y14.36, AND AWS A2.4 STANDARDS.

| | | |
|---|---|---|
| DRAW: RODOLFO PEREIRA | 03/25/2020 | OSPREY POWERPLATFORM |
| APPROVED: LUKE ASHWORTH | 03/25/2020 | TITLE: Osprey PowerPlatform Portrait 2x6, Strut - 60 Cell - STD |
| WEIGHT: N/A lb | | |
| GENERAL TOLERANCES: DECIMALS .X ± .1, .XX ± .01, .XXX ± .005 / ANGULAR ∠ ± 1° | | MATERIAL: N/A |
| | | SIZE B / DWG NO OSP-STRUT-60CELL-2X6 - STD / REV 02 |
| | | SCALE 1:25 / SHEET 3 OF 10 |

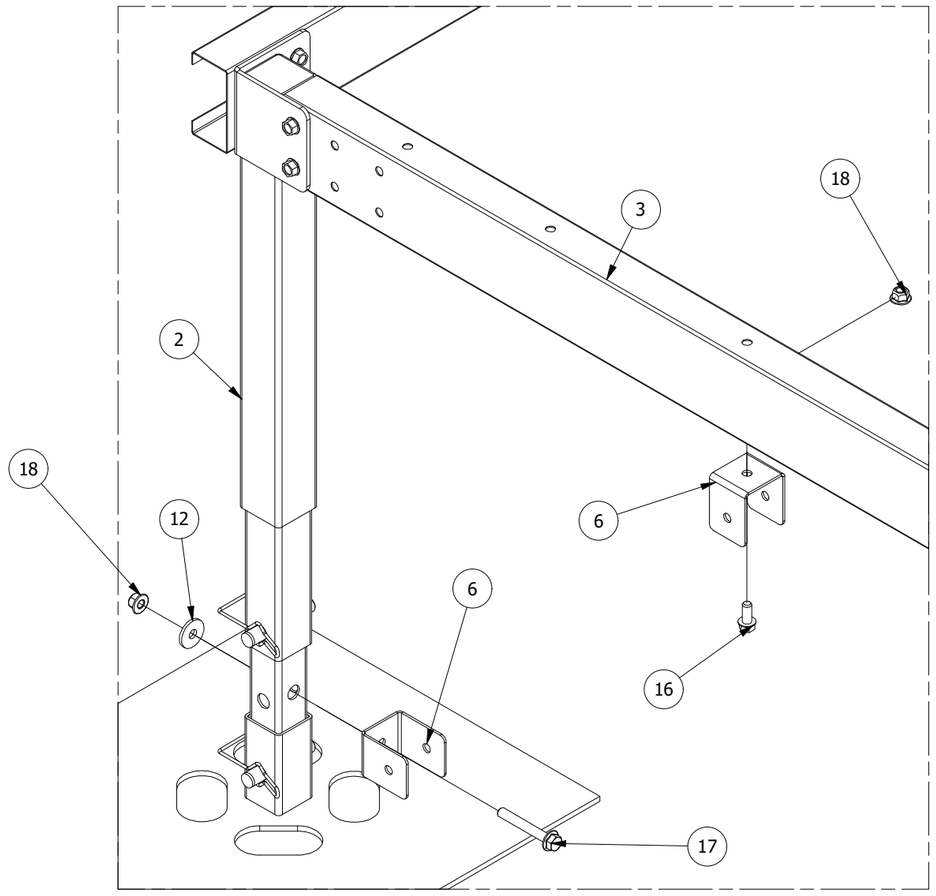


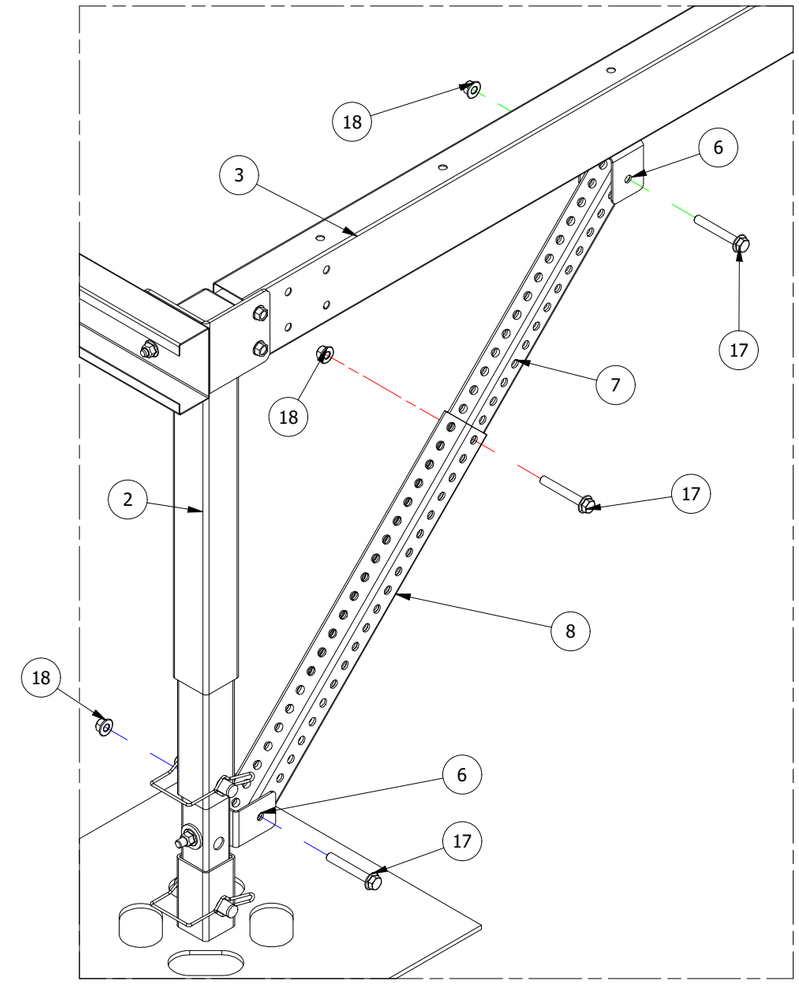


STAMP & SIGNATURE:

ENGINEERED POWER SOLUTIONS
1405 Spring Street, Suite 204
Paso Robles, CA 93446

FOR STRUCTURAL ELEMENTS ONLY

OSPREY POWERPLATFORM

NUANCE ENERGY
Revolutionary Solar Racking Structures

PROPRIETARY AND CONFIDENTIAL: THE INFORMATION CONTAINED HERE IN IS THE SOLE PROPERTY OF NUANCE ENERGY GROUP. INC. ANY REPRODUCTION IN PART OR WHOLE WITHOUT WRITTEN PERMISSIONIS PROHIBITED. (C) COPYRIGHT 2013. ALL RIGHTS RESERVED.

MACHINED FILLET RADII 0.38-1.27 [.015-.050]. BREAK ALL SHARP EDGES 0.2-0.8 [.01-.03] RADII OR 45°. SURFACE FINISH IN MICRO (P) INCHES (Ra). INTERPRET DRAWING PER ASME Y14.5, ASME Y14.36, AND AWS A2.4 STANDARDS.

| | | |
|---|---|---|
| DRAW: RODOLFO PEREIRA | 03/25/2020 | OSPREY POWERPLATFORM |
| APPROVED: LUKE ASHWORTH | 03/25/2020 | TITLE: Osprey PowerPlatform Portrait 2x6, Strut - 60 Cell - STD |
| WEIGHT: N/A lb | | MATERIAL: N/A |
| GENERAL TOLERANCES: DECIMALS .X ± .1, .XX ± .01, .XXX ± .005; ANGULAR ∠ ± 1° | | SIZE B; DWG NO OSP-STRUT-60CELL-2X6 - STD; REV 02 |
| | | SCALE 1:7; SHEET 4 OF 10 |

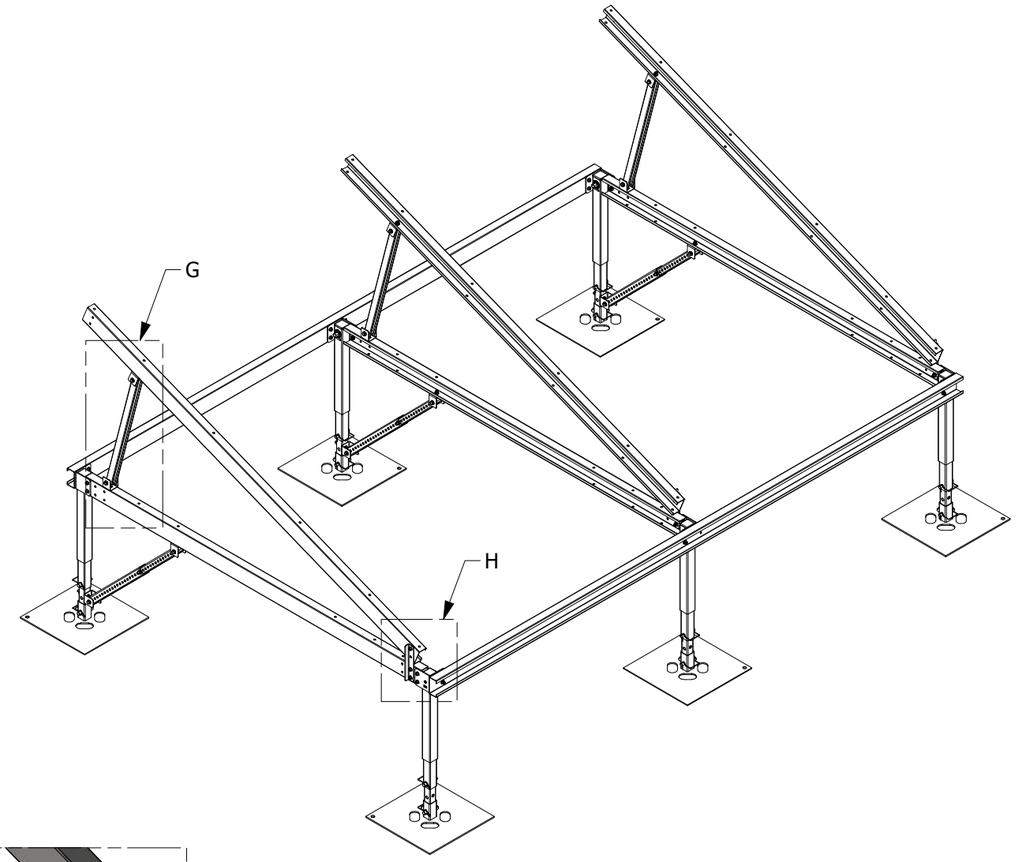


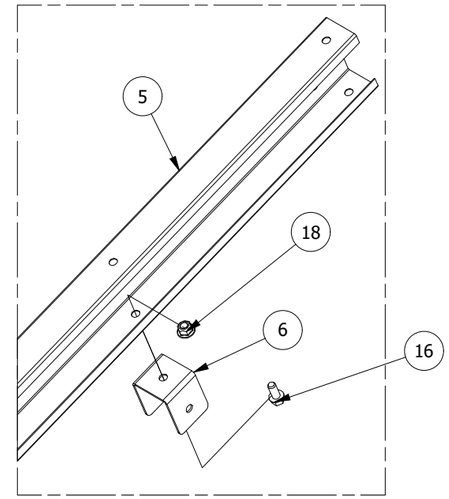


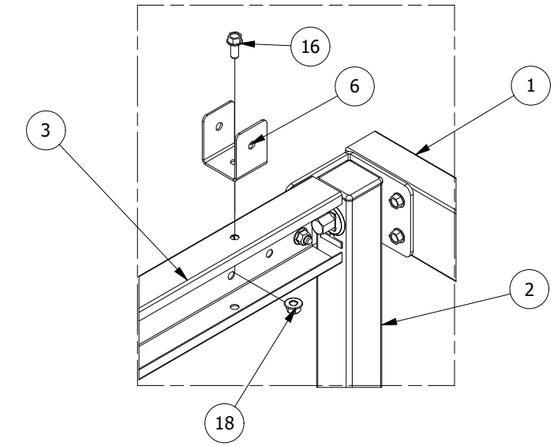


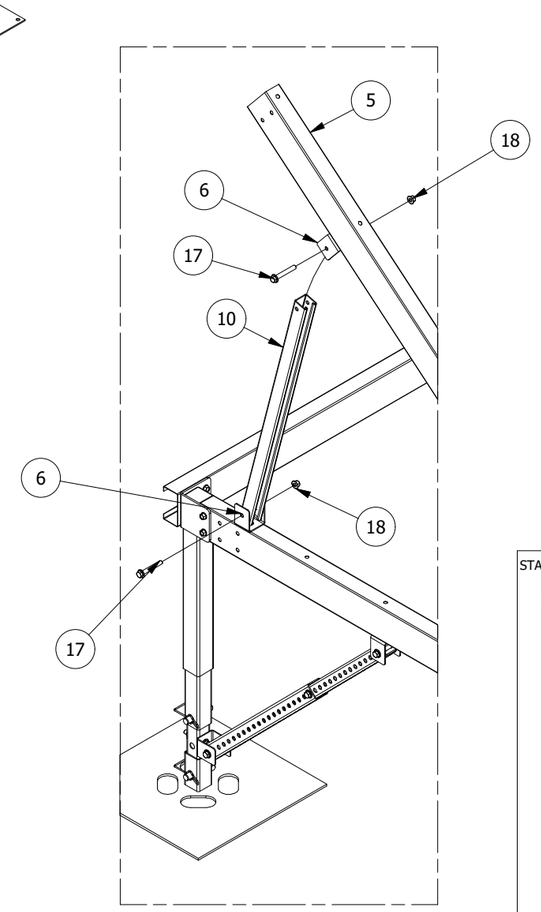


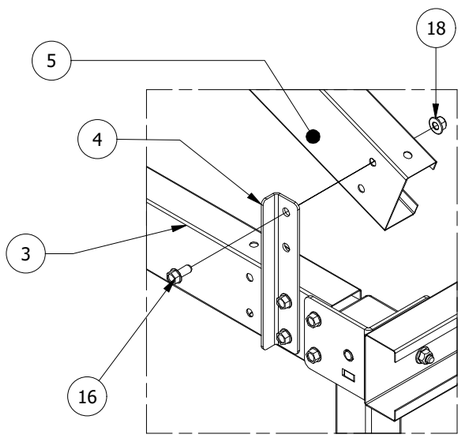


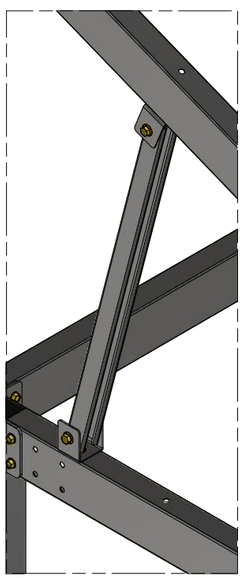

DETAIL G
SCALE 1:10

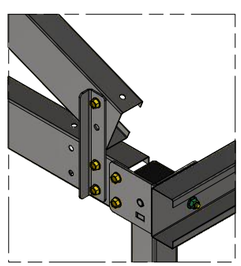

DETAIL H
SCALE 1:10

STAMP & SIGNATURE:

ENGINEERED POWER SOLUTIONS
1405 Spring Street, Suite 204
Paso Robles, CA 93446

FOR STRUCTURAL ELEMENTS ONLY

OSPREY POWERPLATFORM

NUANCE ENERGY
Revolutionary Solar Racking Structures

PROPRIETARY AND CONFIDENTIAL: THE INFORMATION CONTAINED HERE IN IS THE SOLE PROPERTY OF NUANCE ENERGY GROUP. INC. ANY REPRODUCTION IN PART OR WHOLE WITHOUT WRITTEN PERMISSIONIS PROHIBITED. (C) COPYRIGHT 2013. ALL RIGHTS RESERVED.

MACHINED FILLET RADII 0.38-1.27 [.015-.050]. BREAK ALL SHARP EDGES 0.2-0.8 [.01-.03] RADII OR 45°. SURFACE FINISH IN MICRO (P) INCHES (Ra). INTERPRET DRAWING PER ASME Y14.5, ASME Y14.36, AND AWS A2.4 STANDARDS.

| | | |
|---|---|---|
| DRAW: RODOLFO PEREIRA | 03/25/2020 | OSPREY POWERPLATFORM |
| APPROVED: LUKE ASHWORTH | 03/25/2020 | TITLE: Osprey PowerPlatform Portrait 2x6, Strut - 60 Cell - STD |
| WEIGHT: N/A lb | | MATERIAL: N/A |
| GENERAL TOLERANCES: DECIMALS .X ± .1, .XX ± .01, .XXX ± .005 / ANGULAR ∠ ± 1° | | SIZE B / DWG NO OSP-STRUT-60CELL-2X6 - STD / REV 02 |
| | | SCALE 1:30 / SHEET 5 OF 10 |

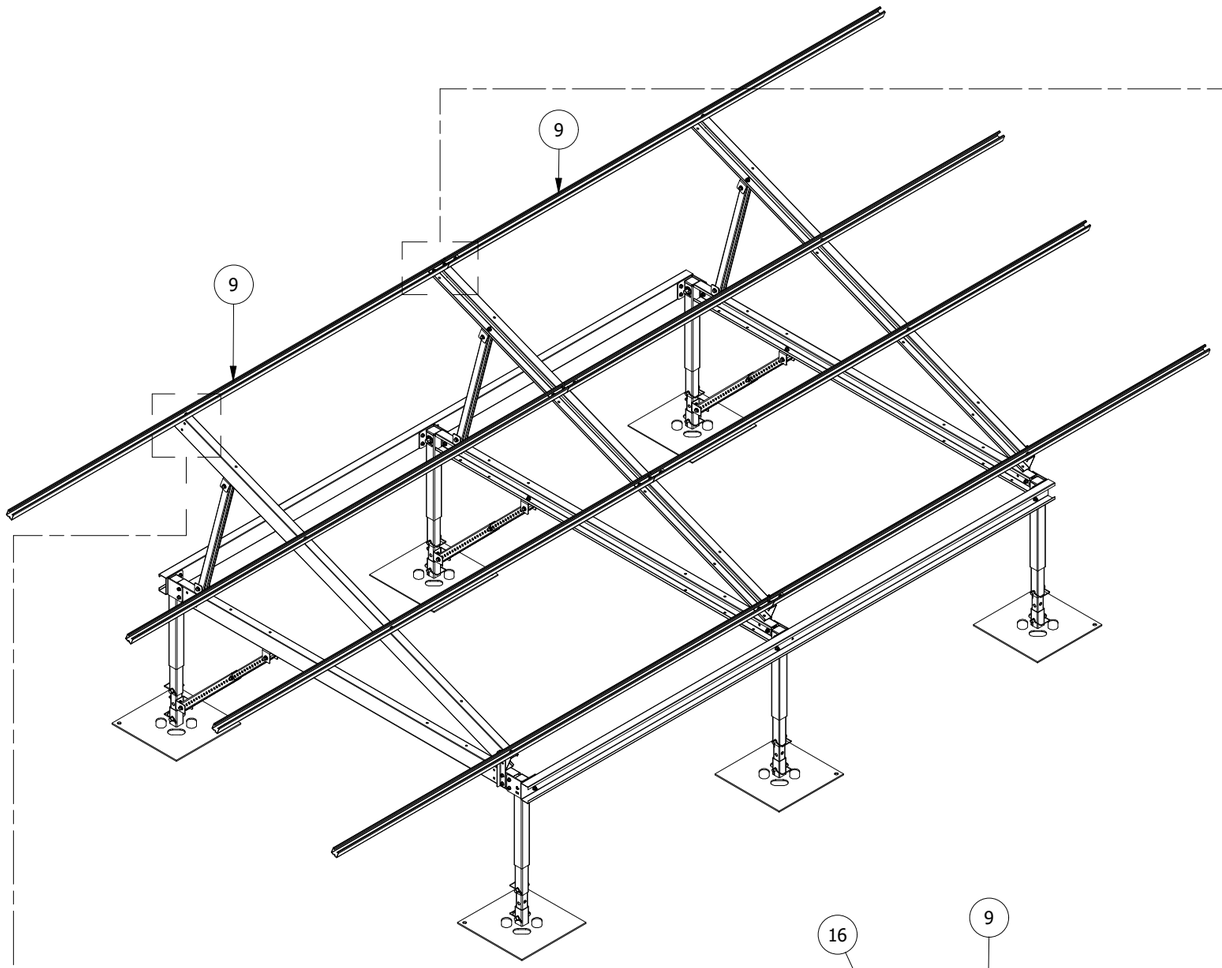


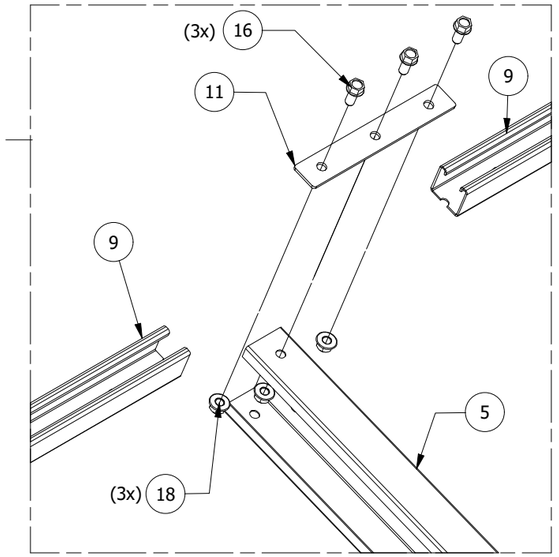


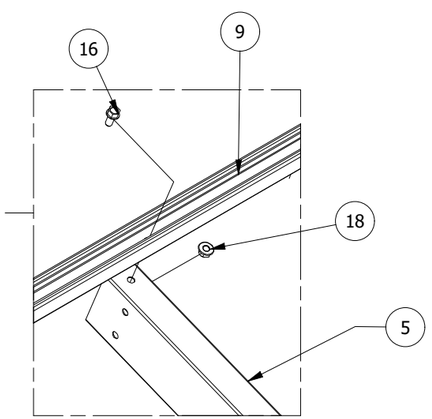


STAMP & SIGNATURE:

ENGINEERED POWER SOLUTIONS
1405 Spring Street, Suite 204
Paso Robles, CA 93446

FOR STRUCTURAL ELEMENTS ONLY

OSPREY POWERPLATFORM

NUANCE ENERGY
Revolutionary Solar Racking Structures

PROPRIETARY AND CONFIDENTIAL: THE INFORMATION CONTAINED HERE IN IS THE SOLE PROPERTY OF NUANCE ENERGY GROUP. INC. ANY REPRODUCTION IN PART OR WHOLE WITHOUT WRITTEN PERMISSIONIS PROHIBITED. (C) COPYRIGHT 2013. ALL RIGHTS RESERVED.

MACHINED FILLET RADII 0.38-1.27 [.015-.050]. BREAK ALL SHARP EDGES 0.2-0.8 [.01-.03] RADII OR 45°. SURFACE FINISH IN MICRO (P) INCHES (Ra). INTERPRET DRAWING PER ASME Y14.5, ASME Y14.36, AND AWS A2.4 STANDARDS.

| | | |
|---|---|---|
| DRAW: RODOLFO PEREIRA | 03/25/2020 | OSPREY POWERPLATFORM |
| APPROVED: LUKE ASHWORTH | 03/25/2020 | TITLE: Osprey PowerPlatform Portrait 2x6, Strut - 60 Cell - STD |
| WEIGHT: N/A lb | | |
| GENERAL TOLERANCES: DECIMALS .X ± .1, .XX ± .01, .XXX ± .005; ANGULAR ∠ ± 1° | | MATERIAL: N/A |
| | | SIZE B; DWG NO OSP-STRUT-60CELL-2X6 - STD; REV 02 |
| | | SCALE 1:30; SHEET 6 OF 10 |

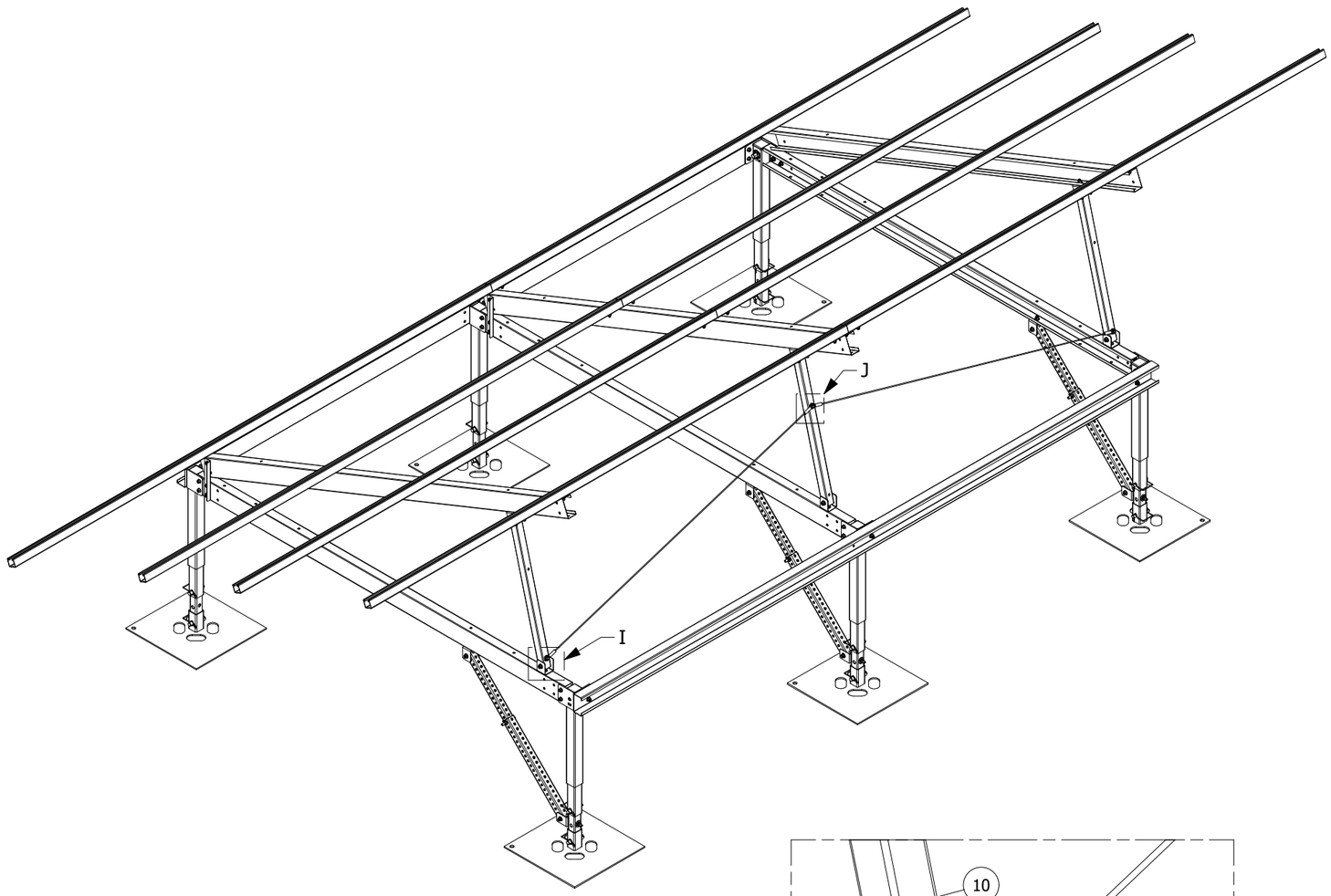


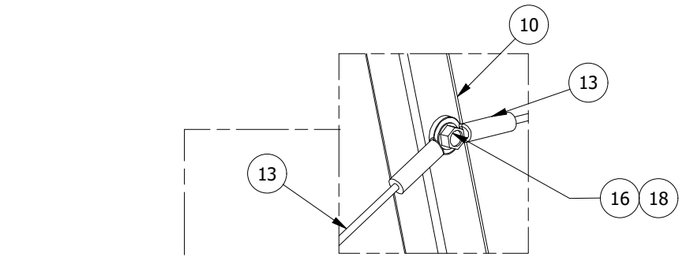


DETAIL J
SCALE 1:4

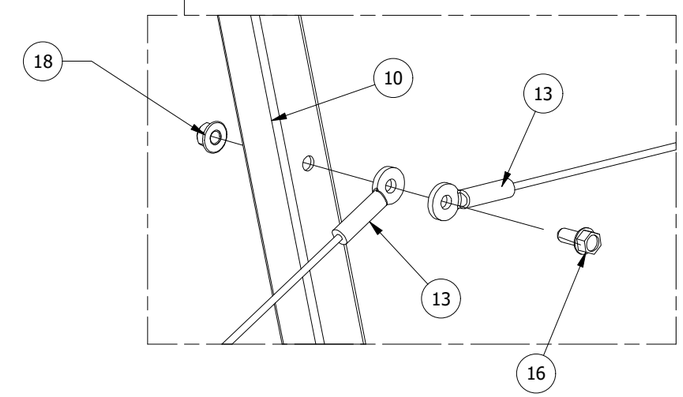


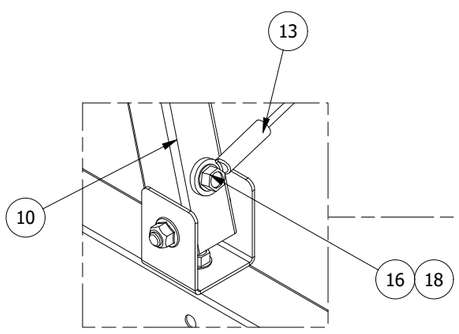


DETAIL I
SCALE 1:4

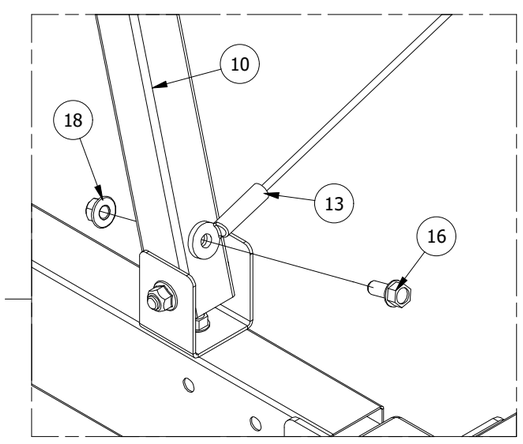


CABLE BRACE MOUNTING (CORNERS)

STAMP & SIGNATURE:

ENGINEERED POWER SOLUTIONS
1405 Spring Street, Suite 204
Paso Robles, CA 93446

FOR STRUCTURAL ELEMENTS ONLY

OSPREY POWERPLATFORM

NUANCE ENERGY
Revolutionary Solar Racking Structures

PROPRIETARY AND CONFIDENTIAL: THE INFORMATION CONTAINED HERE IN IS THE SOLE PROPERTY OF NUANCE ENERGY GROUP. INC. ANY REPRODUCTION IN PART OR WHOLE WITHOUT WRITTEN PERMISSIONIS PROHIBITED. (C) COPYRIGHT 2013. ALL RIGHTS RESERVED.

MACHINED FILLET RADII 0.38-1.27 [.015-.050]. BREAK ALL SHARP EDGES 0.2-0.8 [.01-.03] RADII OR 45°. SURFACE FINISH IN MICRO (P) INCHES (Ra). INTERPRET DRAWING PER ASME Y14.5, ASME Y14.36, AND AWS A2.4 STANDARDS.

| | | |
|---|---|---|
| DRAW: RODOLFO PEREIRA | 03/25/2020 | OSPREY POWERPLATFORM |
| APPROVED: LUKE ASHWORTH | 03/25/2020 | TITLE: Osprey PowerPlatform Portrait 2x6, Strut - 60 Cell - STD |
| WEIGHT: N/A lb | | |
| GENERAL TOLERANCES: DECIMALS .X ± .1, .XX ± .01, .XXX ± .005; ANGULAR ∠ ± 1° | | MATERIAL: N/A |
| | | SIZE B; DWG NO OSP-STRUT-60CELL-2X6 - STD; REV 02 |
| | | SCALE 1:25; SHEET 7 OF 10 |

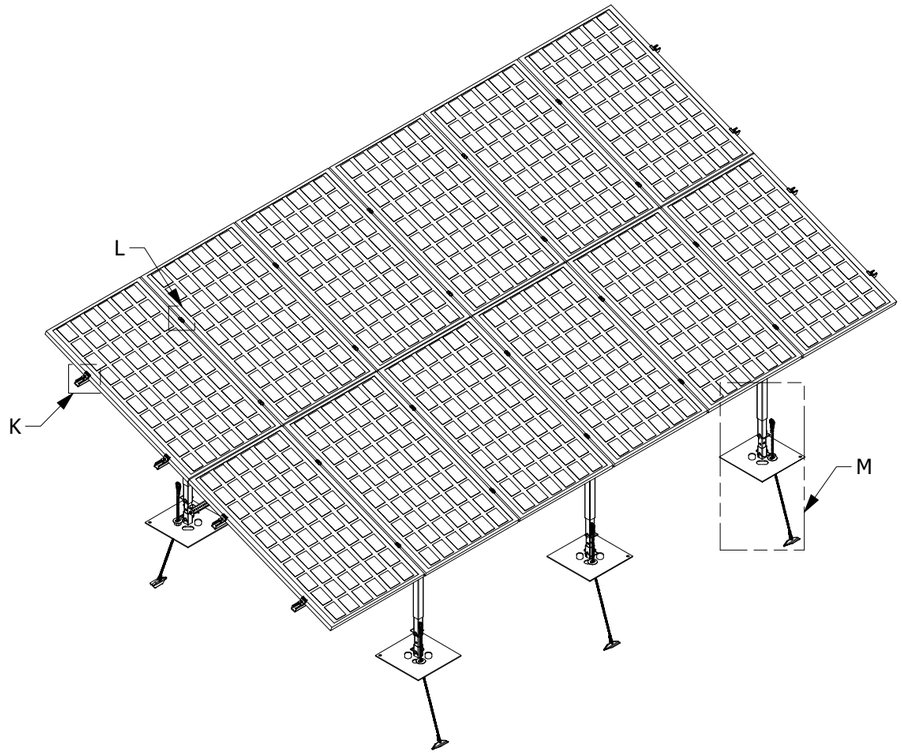


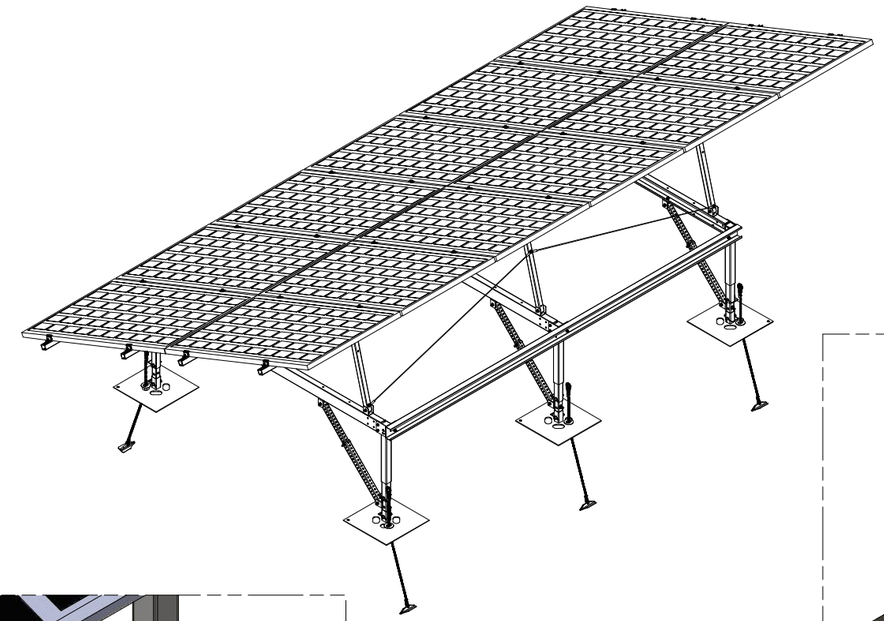

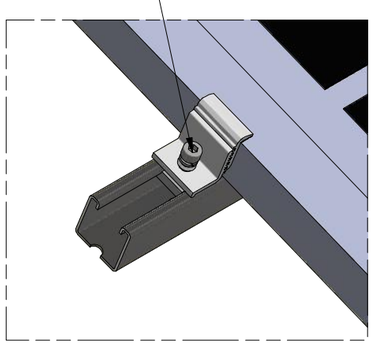


DETAIL K
SCALE 1:4

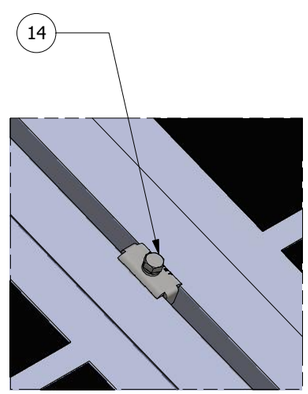


DETAIL L
SCALE 1:4

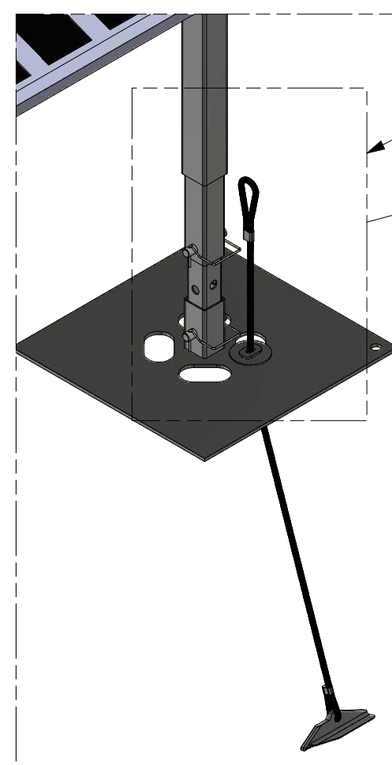


DETAIL M (Typ. 6x - 180º)
SCALE 1:10

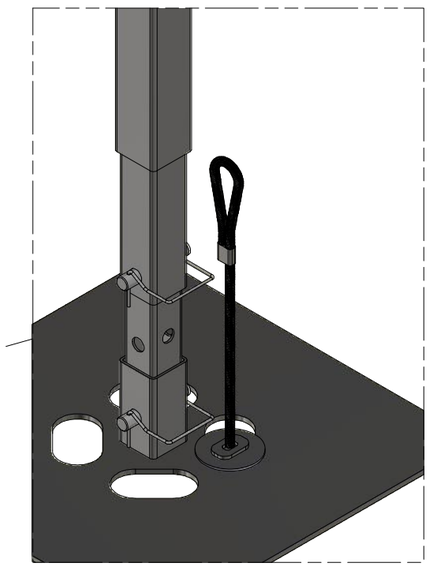

DETAIL N (ANCHOR DETAIL)
SCALE 1:6

STAMP & SIGNATURE:

ENGINEERED POWER SOLUTIONS
1405 Spring Street, Suite 204
Paso Robles, CA 93446

FOR STRUCTURAL ELEMENTS ONLY

OSPREY POWERPLATFORM

NUANCE ENERGY
Revolutionary Solar Racking Structures

PROPRIETARY AND CONFIDENTIAL: THE INFORMATION CONTAINED HERE IN IS THE SOLE PROPERTY OF NUANCE ENERGY GROUP. INC. ANY REPRODUCTION IN PART OR WHOLE WITHOUT WRITTEN PERMISSIONIS PROHIBITED. (C) COPYRIGHT 2013. ALL RIGHTS RESERVED.

MACHINED FILLET RADII 0.38-1.27 [.015-.050]. BREAK ALL SHARP EDGES 0.2-0.8 [.01-.03] RADII OR 45°. SURFACE FINISH IN MICRO (P) INCHES (Ra). INTERPRET DRAWING PER ASME Y14.5, ASME Y14.36, AND AWS A2.4 STANDARDS.

| | | |
|---|---|---|
| DRAW: RODOLFO PEREIRA | 03/25/2020 | OSPREY POWERPLATFORM |
| APPROVED: LUKE ASHWORTH | 03/25/2020 | TITLE: Osprey PowerPlatform Portrait 2x6, Strut - 60 Cell - STD |
| WEIGHT: N/A lb | | MATERIAL: N/A |
| GENERAL TOLERANCES: DECIMALS .X ± .1, .XX ± .01, .XXX ± .005; ANGULAR ∠ ± 1º | | SIZE B; DWG NO OSP-STRUT-60CELL-2X6 - STD; REV 02 |
| | | SCALE 1:45; SHEET 8 OF 10 |

# (THERMAL EXPANSION GAP NEEDED AFTER 5 OSPREY CONNECTED TOGETHER)

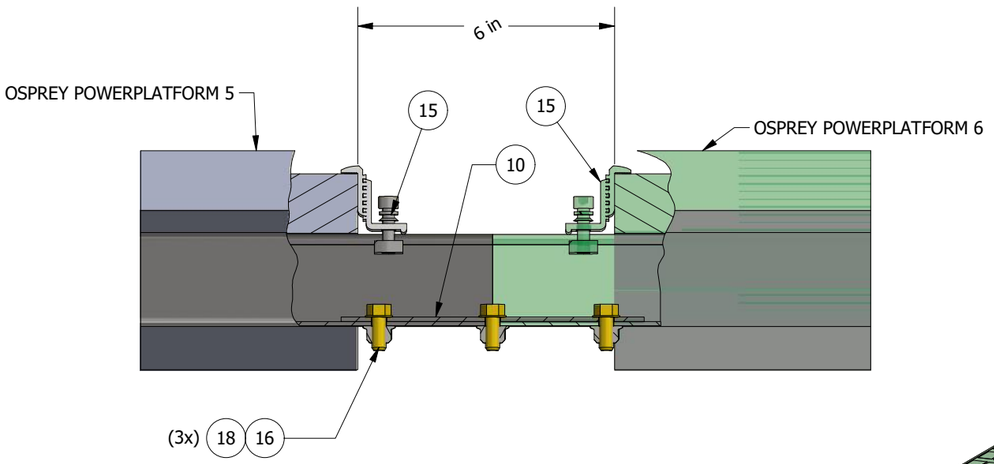


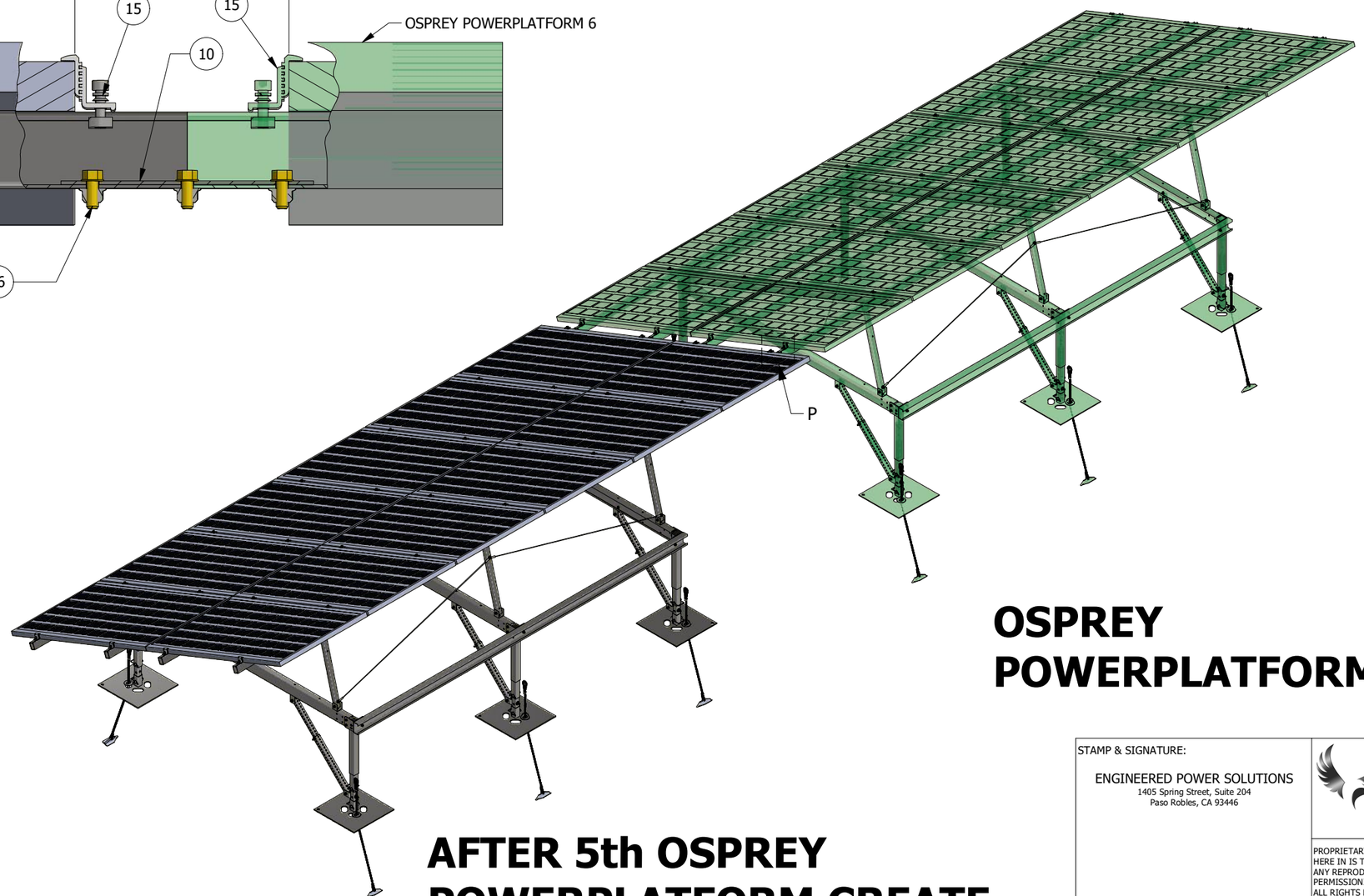


## OSPREY POWERPLATFORM 6

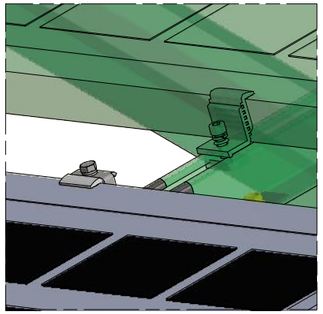

DETAIL P
SCALE 1:5

## AFTER 5th OSPREY POWERPLATFORM CREATE EXPANSION GAP

STAMP & SIGNATURE:

ENGINEERED POWER SOLUTIONS
1405 Spring Street, Suite 204
Paso Robles, CA 93446

FOR STRUCTURAL ELEMENTS ONLY

OSPREY POWERPLATFORM

NUANCE ENERGY
Revolutionary Solar Racking Structures

PROPRIETARY AND CONFIDENTIAL: THE INFORMATION CONTAINED HERE IN IS THE SOLE PROPERTY OF NUANCE ENERGY GROUP. INC. ANY REPRODUCTION IN PART OR WHOLE WITHOUT WRITTEN PERMISSIONIS PROHIBITED. (C) COPYRIGHT 2013. ALL RIGHTS RESERVED.

MACHINED FILLET RADII 0.38-1.27 [.015-.050]. BREAK ALL SHARP EDGES 0.2-0.8 [.01-.03] RADII OR 45°. SURFACE FINISH IN MICRO (P) INCHES (Ra). INTERPRET DRAWING PER ASME Y14.5, ASME Y14.36, AND AWS A2.4 STANDARDS.

| | | |
|---|---|---|
| DRAW: RODOLFO PEREIRA | 03/25/2020 | OSPREY POWERPLATFORM |
| APPROVED: LUKE ASHWORTH | 03/25/2020 | TITLE: Osprey PowerPlatform Portrait 2x6, Strut - 60 Cell - STD |
| WEIGHT: N/A lb | | MATERIAL: N/A |
| GENERAL TOLERANCES: DECIMALS .X ± .1, .XX ± .01, .XXX ± .005 / ANGULAR ∠ ± 1° | | SIZE B / DWG NO OSP-STRUT-60CELL-2X6 - STD / REV 02 |
| | | SCALE 1:40 / SHEET 9 OF 10 |

# (THERMAL EXPANSION GAP NEEDED CONNECTED TOGETHER)

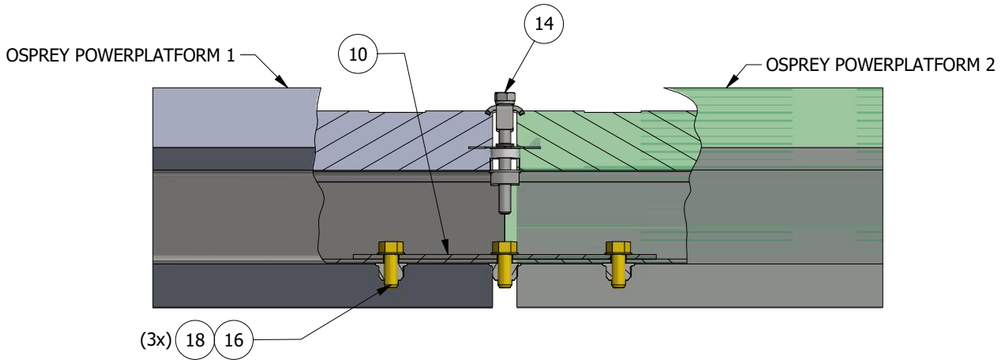


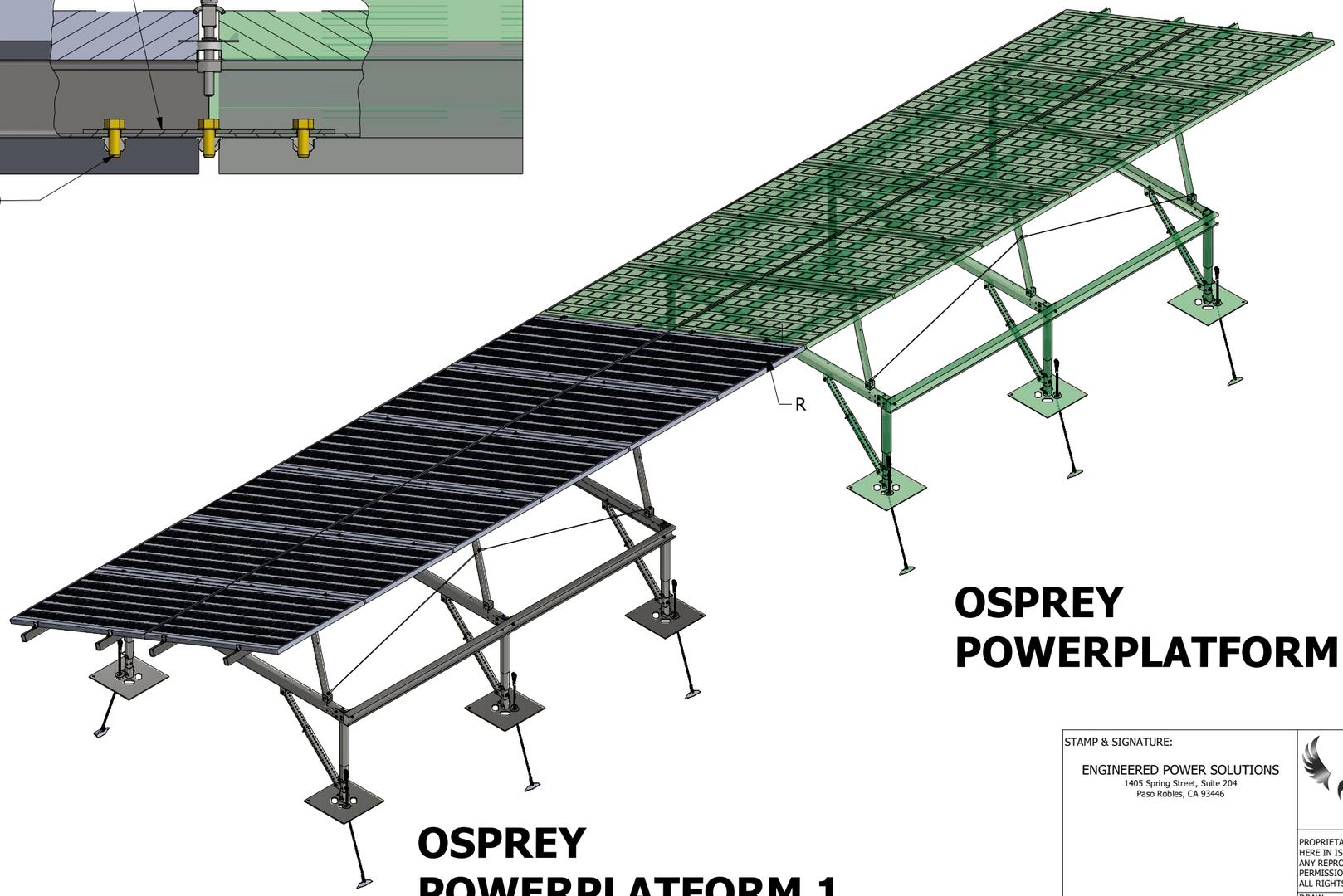


**OSPREY POWERPLATFORM 2**

**OSPREY POWERPLATFORM 1**

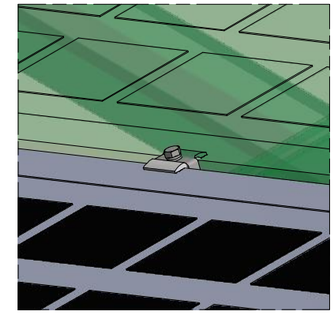

DETAIL R
SCALE 1:5

STAMP & SIGNATURE:

ENGINEERED POWER SOLUTIONS
1405 Spring Street, Suite 204
Paso Robles, CA 93446

FOR STRUCTURAL ELEMENTS ONLY

OSPREY POWERPLATFORM

NUANCE ENERGY
Revolutionary Solar Racking Structures

PROPRIETARY AND CONFIDENTIAL: THE INFORMATION CONTAINED HERE IN IS THE SOLE PROPERTY OF NUANCE ENERGY GROUP. INC. ANY REPRODUCTION IN PART OR WHOLE WITHOUT WRITTEN PERMISSIONIS PROHIBITED. (C) COPYRIGHT 2013. ALL RIGHTS RESERVED.

MACHINED FILLET RADII 0.38-1.27 [.015-.050]. BREAK ALL SHARP EDGES 0.2-0.8 [.01-.03] RADII OR 45°. SURFACE FINISH IN MICRO (P) INCHES (Ra). INTERPRET DRAWING PER ASME Y14.5, ASME Y14.36, AND AWS A2.4 STANDARDS.

| | | |
|---|---|---|
| DRAW: RODOLFO PEREIRA | 03/25/2020 | OSPREY POWERPLATFORM |
| APPROVED: LUKE ASHWORTH | 03/25/2020 | TITLE: Osprey PowerPlatform Portrait 2x6, Strut - 60 Cell - STD |
| WEIGHT: N/A lb | | MATERIAL: N/A |
| GENERAL TOLERANCES: DECIMALS .X ± .1, .XX ± .01, .XXX ± .005; ANGULAR ∠ ± 1° | | SIZE B; DWG NO OSP-STRUT-60CELL-2X6 - STD; REV 02 |
| | | SCALE 1:40; SHEET 10 OF 10 |