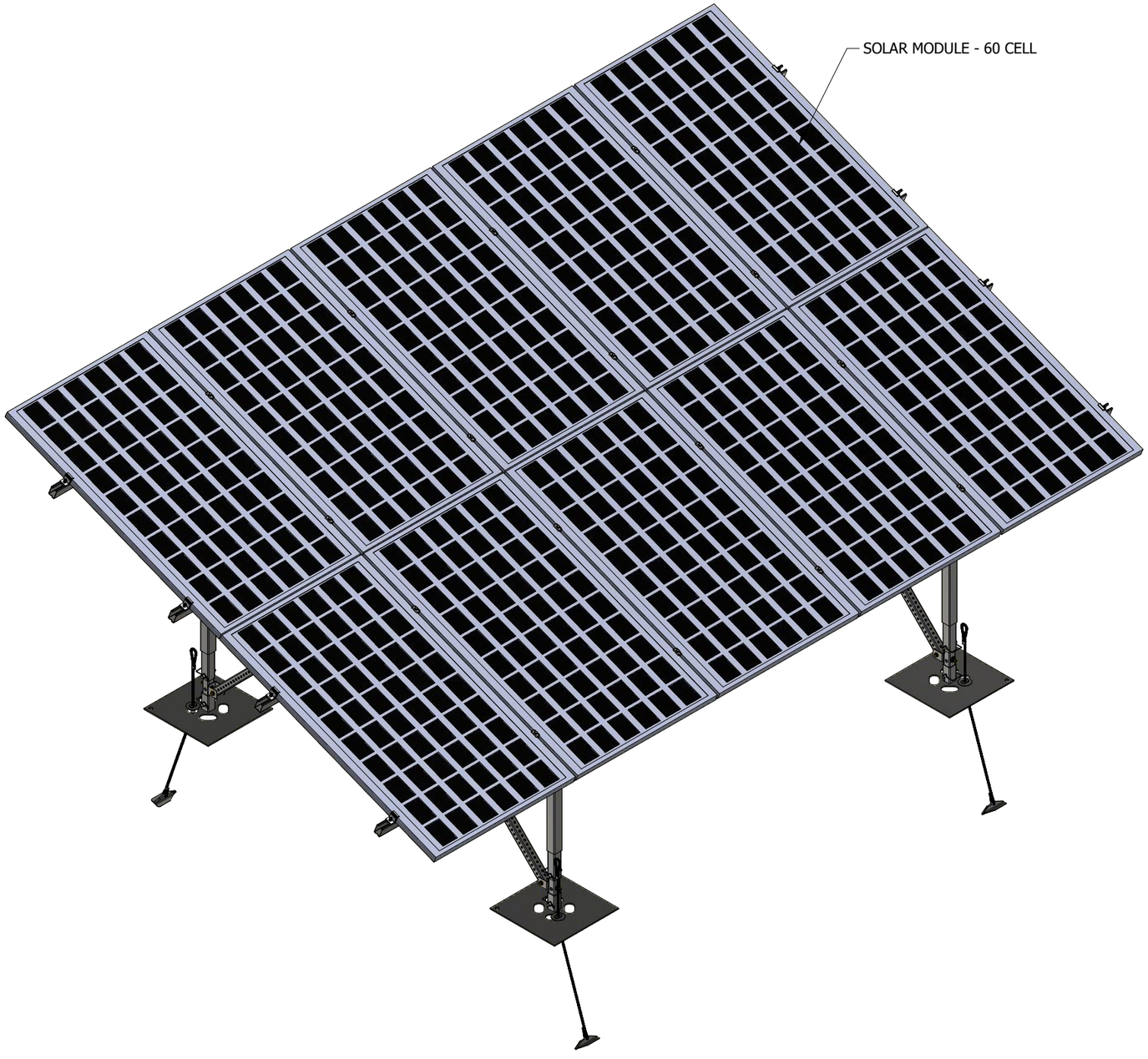

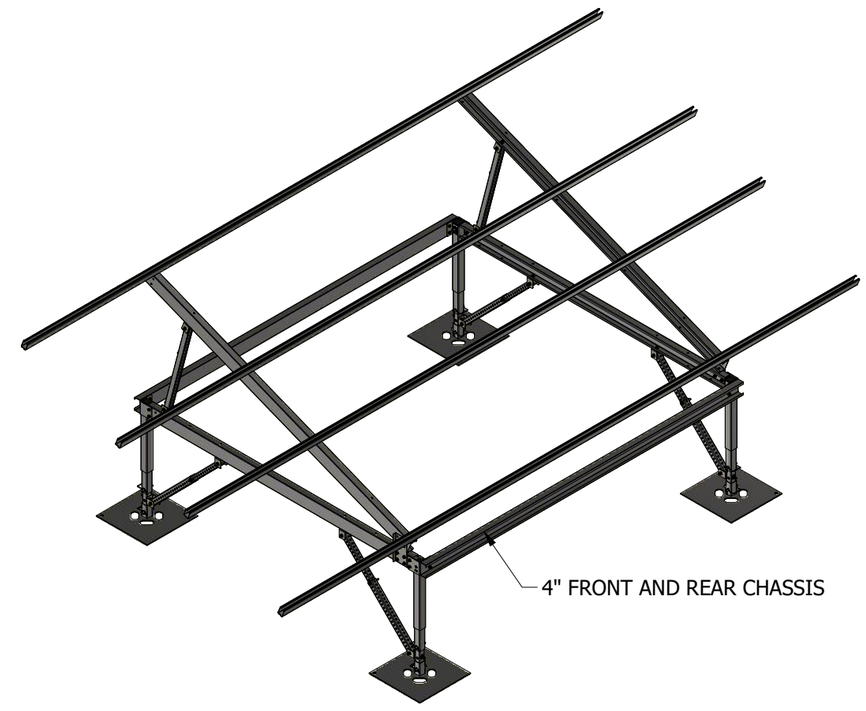

STAMP & SIGNATURE:

ENGINEERED POWER SOLUTIONS
1405 Spring Street, Suite 204
Paso Robles, CA 93446

FOR STRUCTURAL ELEMENTS ONLY

OSPREY POWERPLATFORM

NUANCE ENERGY
Revolutionary Solar Racking Structures

PROPRIETARY AND CONFIDENTIAL: THE INFORMATION CONTAINED HERE IN IS THE SOLE PROPERTY OF NUANCE ENERGY GROUP. INC. ANY REPRODUCTION IN PART OR WHOLE WITHOUT WRITTEN PERMISSIONIS PROHIBITED. (C) COPYRIGHT 2013. ALL RIGHTS RESERVED.

MACHINED FILLET RADII 0.38-1.27 [.015-.050]. BREAK ALL SHARP EDGES 0.2-0.8 [.01-.03] RADII OR 45°. SURFACE FINISH IN MICRO (P) INCHES (Ra). INTERPRET DRAWING PER ASME Y14.5, ASME Y14.36, AND AWS A2.4 STANDARDS.

DRAW: RODOLFO PEREIRA	03/25/2020	OSPREY POWERPLATFORM
APPROVED: LUKE ASHWORTH	03/25/2020	TITLE: Osprey PowerPlatform Portrait 2x5, Strut - 60 Cell - XHD
WEIGHT: N/A lb		MATERIAL: N/A
GENERAL TOLERANCES: DECIMALS .X ± .1, .XX ± .01, .XXX ± .005 / ANGULAR ∠ ± 1°		SIZE B / DWG NO OSP-STRUT-60CELL-2X5 - XHD / REV 02
		SCALE 1:25 / SHEET 1 OF 10

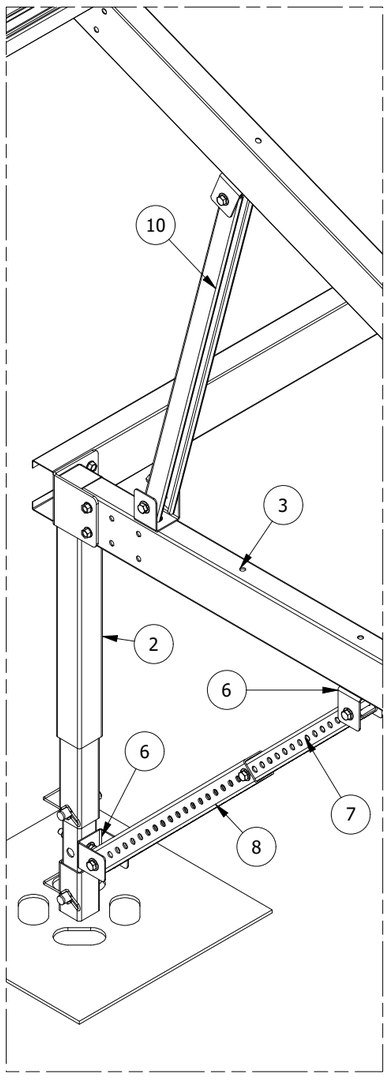

DETAIL A (2x)
SCALE 1:10

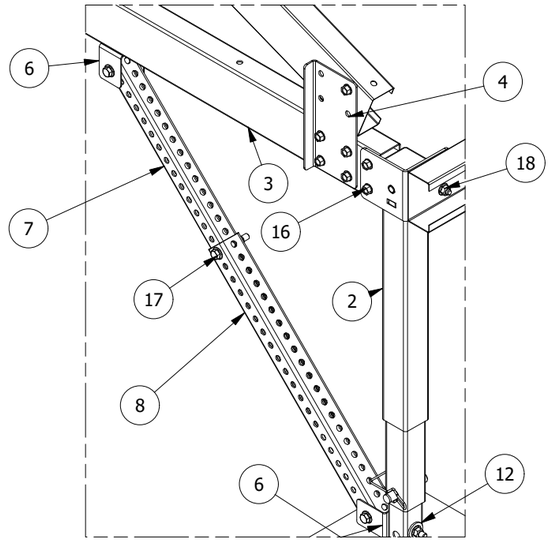

DETAIL B (2x)
SCALE 1:10

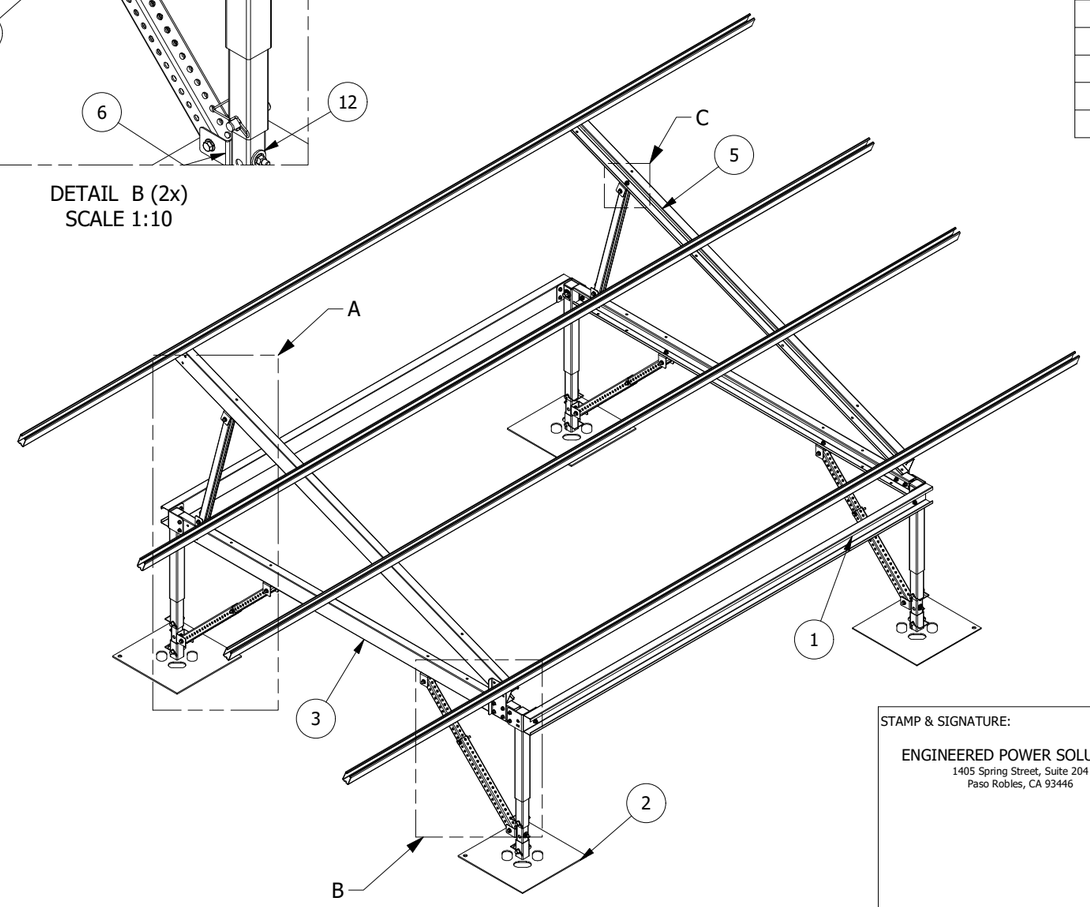

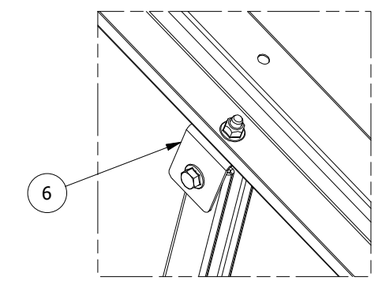

DETAIL C
SCALE 1:5

PARTS LIST

ITEM	DESCRIPTION	QTY
1	FRONT AND REAR CHASSIS STUD - 2x5 XHD - G90	2
2	POWER ADJUSTABLE LEG	4
3	CHASSIS STUD - USA 60 CELL XHD	2
4	RACK MOUNTING BRACKET - 4 HOLE	2
5	STRONGBACK-STRUT60 - XHD G90	2
6	BACK BRACE BRACKET	12
7	TELESCOPIC TUBING 1.50 x 1.50	4
8	TELESCOPIC TUBING 1.75 x 1.75	4
9	STRUT RAIL - USA 2x5 XHD - G90	4
10	BACK BRACE - AS DRAWING 402-009	2
13	1/8" CABLE BRACE 2X5 AS DRAWING	2
12	FENDER WASHER	4
14	SELF-BONDING MID CLAMP	16
15	ADJUSTABLE END CLAMP	8
16	SERRATED FLANGE BOLT - 3/8"-16 x 1" - [514-008-01]	39
17	SERRATED FLANGE BOLT 3/8"-16 x 2.5" - [514-007-01]	20
18	SERRATED FLANGE NUT -3/8"-16 [514-006-01]	60

STAMP & SIGNATURE:

ENGINEERED POWER SOLUTIONS
1405 Spring Street, Suite 204
Paso Robles, CA 93446

FOR STRUCTURAL ELEMENTS ONLY

OSPREY POWERPLATFORM

NUANCE ENERGY
Revolutionary Solar Racking Structures

PROPRIETARY AND CONFIDENTIAL: THE INFORMATION CONTAINED HERE IN IS THE SOLE PROPERTY OF NUANCE ENERGY GROUP. INC. ANY REPRODUCTION IN PART OR WHOLE WITHOUT WRITTEN PERMISSIONIS PROHIBITED. (C) COPYRIGHT 2013. ALL RIGHTS RESERVED.

MACHINED FILLET RADII 0.38-1.27 [.015-.050]. BREAK ALL SHARP EDGES 0.2-0.8 [.01-.03] RADII OR 45°. SURFACE FINISH IN MICRO (P) INCHES (Ra). INTERPRET DRAWING PER ASME Y14.5, ASME Y14.36, AND AWS A2.4 STANDARDS.

DRAW: RODOLFO PEREIRA 03/25/2020

APPROVED: LUKE ASHWORTH 03/25/2020

WEIGHT: N/A lb

GENERAL TOLERANCES:
DECIMALS: .X ± .1, .XX ± .01, .XXX ± .005
ANGULAR: ∠ ± 1°

OSPREY POWERPLATFORM

TITLE
Osprey PowerPlatform Portrait 2x5, Strut - 60 Cell - XHD

MATERIAL: N/A

SIZE: B
DWG NO: OSP-STRUT-60CELL-2X5 - XHD
REV: 02
SCALE: 1:30
SHEET 2 OF 10

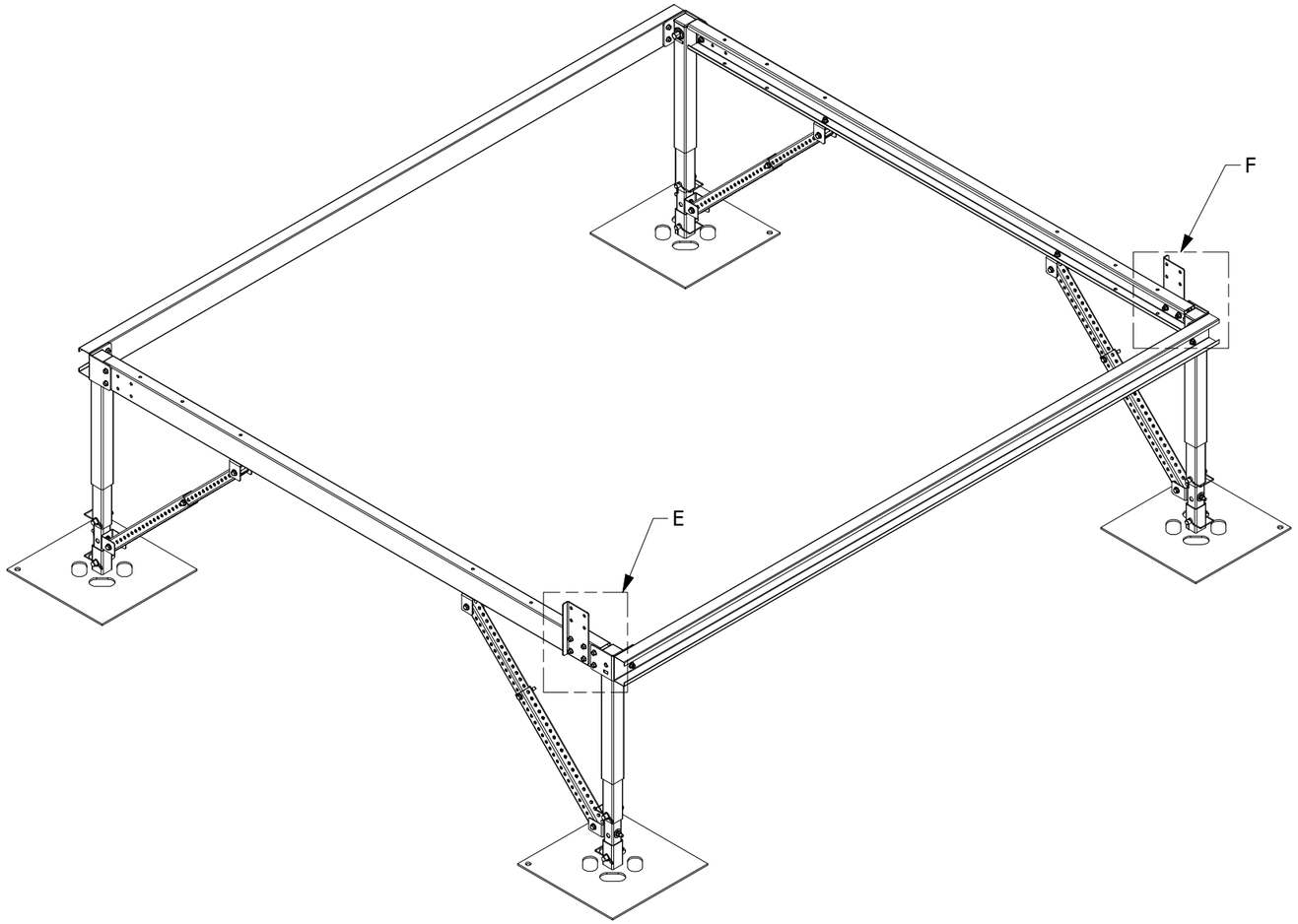

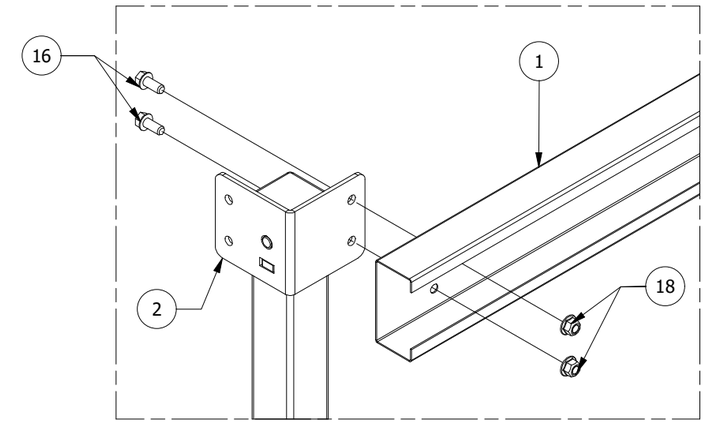

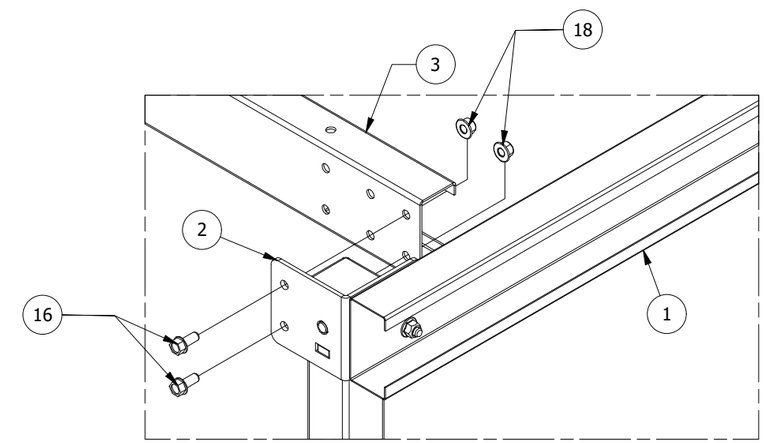

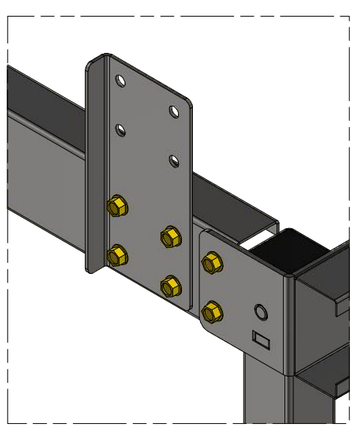

DETAIL E
SCALE 1:5

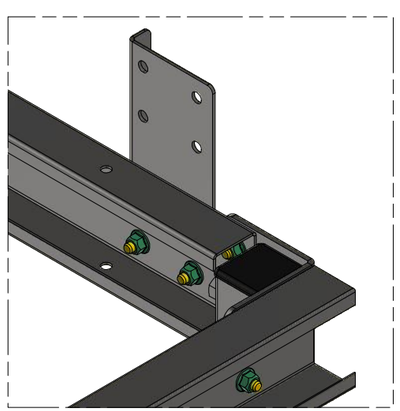

DETAIL F
SCALE 1:5

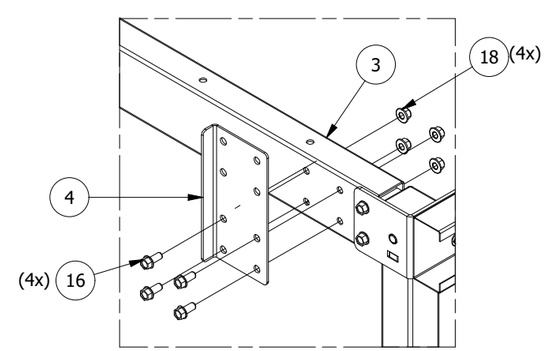

STAMP & SIGNATURE:

ENGINEERED POWER SOLUTIONS
1405 Spring Street, Suite 204
Paso Robles, CA 93446

FOR STRUCTURAL ELEMENTS ONLY

OSPREY POWERPLATFORM

NUANCE ENERGY
Revolutionary Solar Racking Structures

PROPRIETARY AND CONFIDENTIAL: THE INFORMATION CONTAINED HERE IN IS THE SOLE PROPERTY OF NUANCE ENERGY GROUP. INC. ANY REPRODUCTION IN PART OR WHOLE WITHOUT WRITTEN PERMISSIONIS PROHIBITED. (C) COPYRIGHT 2013. ALL RIGHTS RESERVED.

MACHINED FILLET RADII 0.38-1.27 [.015-.050]. BREAK ALL SHARP EDGES 0.2-0.8 [.01-.03] RADII OR 45°. SURFACE FINISH IN MICRO (P) INCHES (Ra). INTERPRET DRAWING PER ASME Y14.5, ASME Y14.36, AND AWS A2.4 STANDARDS.

DRAW: RODOLFO PEREIRA	03/25/2020	OSPREY POWERPLATFORM
APPROVED: LUKE ASHWORTH	03/25/2020	TITLE: Osprey PowerPlatform Portrait 2x5, Strut - 60 Cell - XHD
WEIGHT: N/A lb		MATERIAL: N/A
GENERAL TOLERANCES: DECIMALS .X ± .1, .XX ± .01, .XXX ± .005; ANGULAR ∠ ± 1°		SIZE B; DWG NO OSP-STRUT-60CELL-2X5 - XHD; REV 02; SCALE 1:20; SHEET 3 OF 10

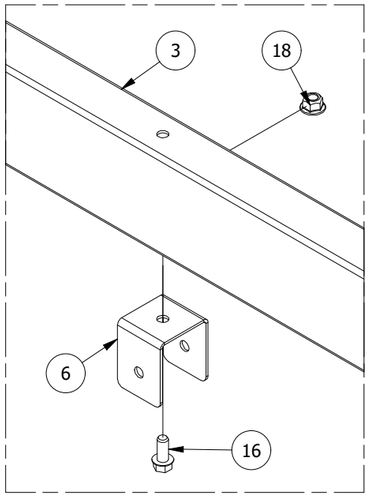

(6x) ON CHASSIS STUD

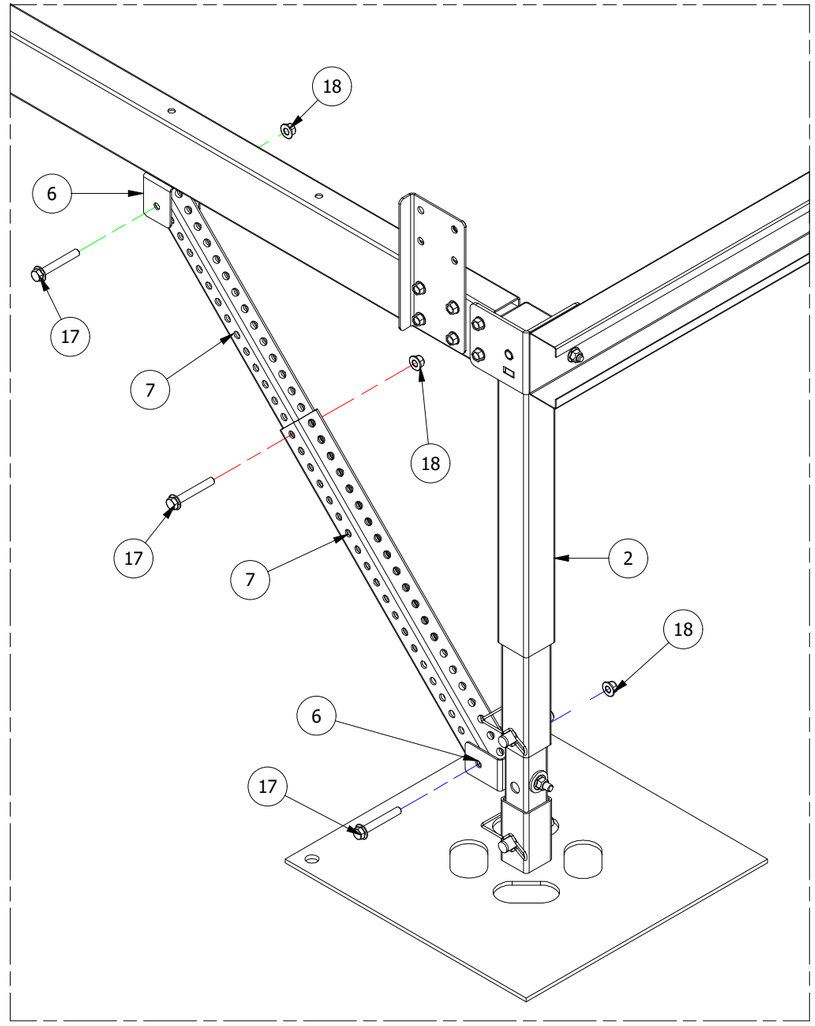

(FRONT CHASSIS) (3x)

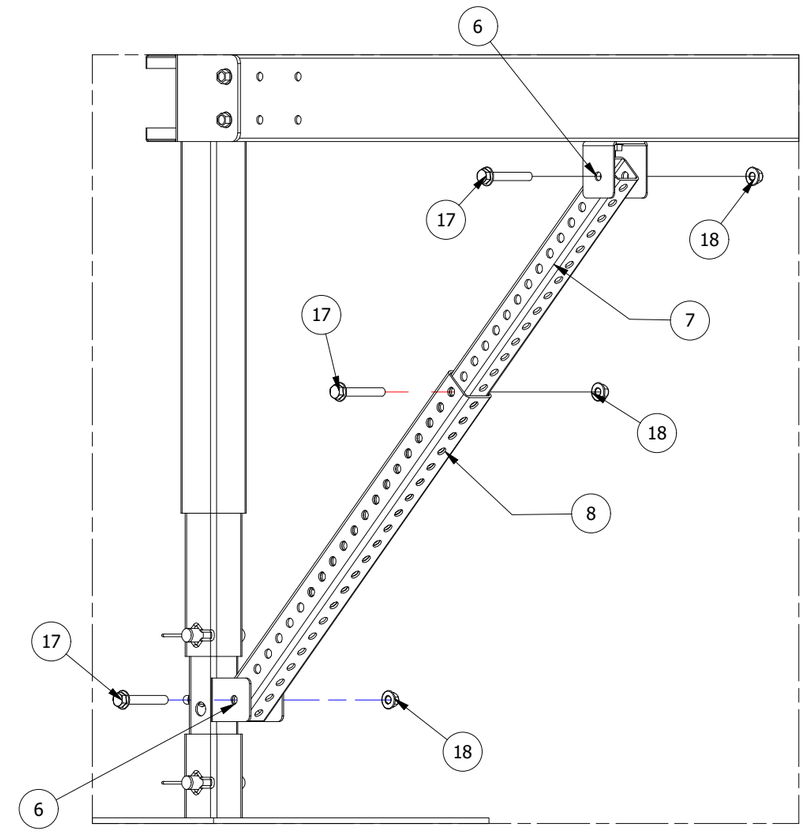

(REAR CHASSIS) (3x)

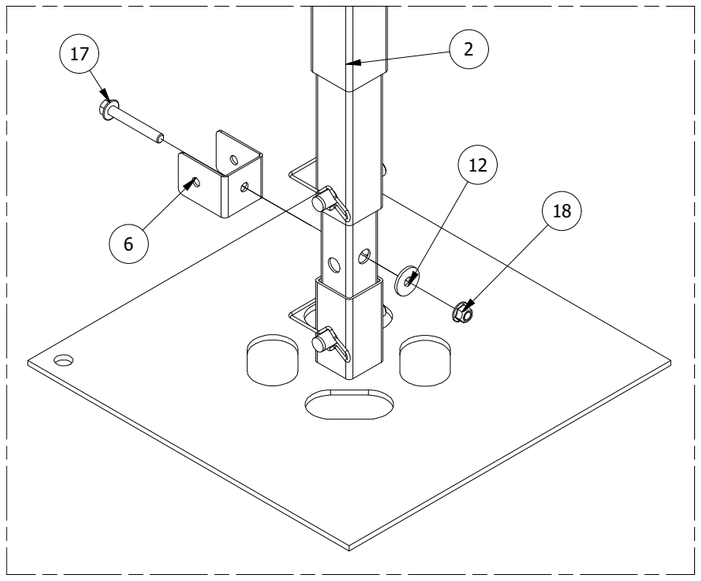

(6x) ON LEG SHOES

STAMP & SIGNATURE:

ENGINEERED POWER SOLUTIONS
1405 Spring Street, Suite 204
Paso Robles, CA 93446

FOR STRUCTURAL ELEMENTS ONLY

OSPREY POWERPLATFORM

NUANCE ENERGY
Revolutionary Solar Racking Structures

PROPRIETARY AND CONFIDENTIAL: THE INFORMATION CONTAINED HERE IN IS THE SOLE PROPERTY OF NUANCE ENERGY GROUP. INC. ANY REPRODUCTION IN PART OR WHOLE WITHOUT WRITTEN PERMISSIONIS PROHIBITED. (C) COPYRIGHT 2013. ALL RIGHTS RESERVED.

MACHINED FILLET RADII 0.38-1.27 [.015-.050]. BREAK ALL SHARP EDGES 0.2-0.8 [.01-.03] RADII OR 45°. SURFACE FINISH IN MICRO (P) INCHES (Ra). INTERPRET DRAWING PER ASME Y14.5, ASME Y14.36, AND AWS A2.4 STANDARDS.

DRAW: RODOLFO PEREIRA	03/25/2020	OSPREY POWERPLATFORM
APPROVED: LUKE ASHWORTH	03/25/2020	TITLE: Osprey PowerPlatform Portrait 2x5, Strut - 60 Cell - XHD
WEIGHT: N/A lb		MATERIAL: N/A
GENERAL TOLERANCES: DECIMALS .X ± .1, .XX ± .01, .XXX ± .005; ANGULAR ∠ ± 1°		SIZE B; DWG NO OSP-STRUT-60CELL-2X5 - XHD; REV 02
		SCALE 1:8; SHEET 4 OF 10

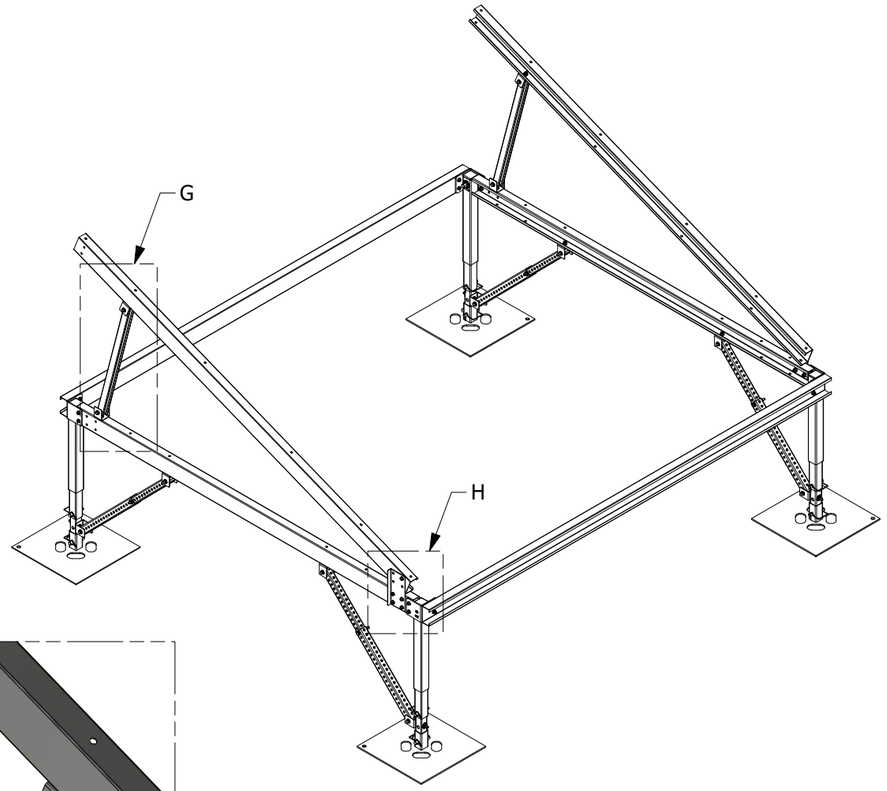

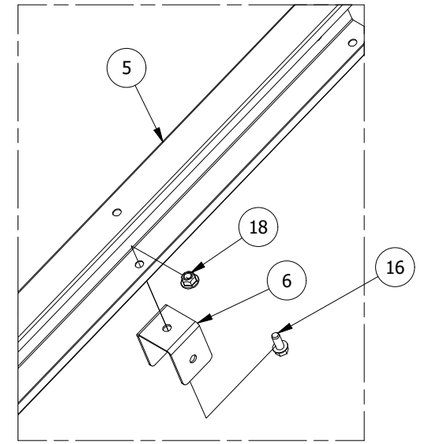

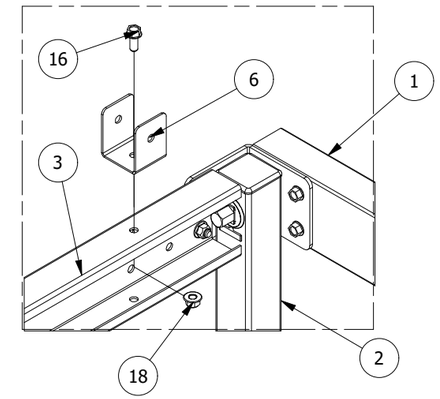

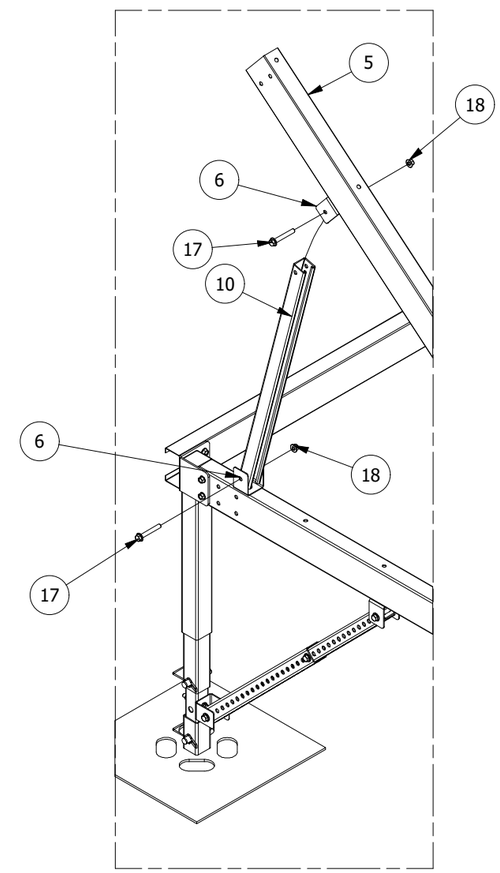

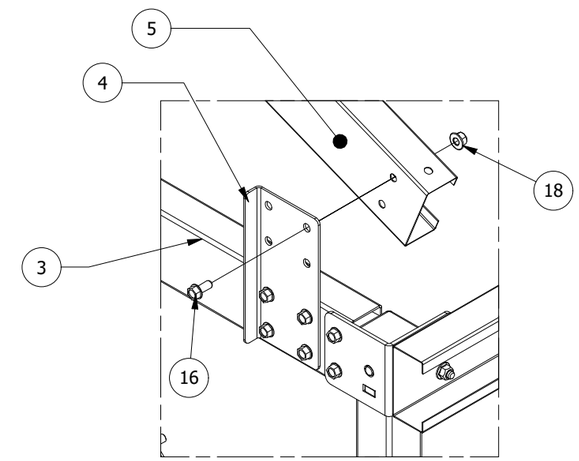

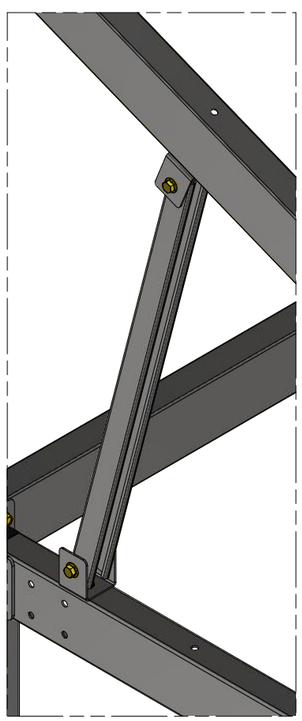

DETAIL G
SCALE 1:8

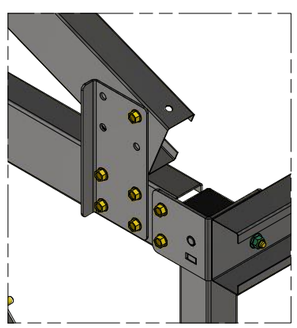

DETAIL H
SCALE 1:8

STAMP & SIGNATURE:

ENGINEERED POWER SOLUTIONS
1405 Spring Street, Suite 204
Paso Robles, CA 93446

FOR STRUCTURAL ELEMENTS ONLY

OSPREY POWERPLATFORM

NUANCE ENERGY
Revolutionary Solar Racking Structures

PROPRIETARY AND CONFIDENTIAL: THE INFORMATION CONTAINED HERE IN IS THE SOLE PROPERTY OF NUANCE ENERGY GROUP. INC. ANY REPRODUCTION IN PART OR WHOLE WITHOUT WRITTEN PERMISSIONIS PROHIBITED. (C) COPYRIGHT 2013. ALL RIGHTS RESERVED.

MACHINED FILLET RADII 0.38-1.27 [.015-.050]. BREAK ALL SHARP EDGES 0.2-0.8 [.01-.03] RADII OR 45°. SURFACE FINISH IN MICRO (P) INCHES (Ra). INTERPRET DRAWING PER ASME Y14.5, ASME Y14.36, AND AWS A2.4 STANDARDS.

DRAW: RODOLFO PEREIRA	03/25/2020	OSPREY POWERPLATFORM
APPROVED: LUKE ASHWORTH	03/25/2020	TITLE: Osprey PowerPlatform Portrait 2x5, Strut - 60 Cell - XHD
WEIGHT: N/A lb		MATERIAL: N/A
GENERAL TOLERANCES: DECIMALS .X ± .1, .XX ± .01, .XXX ± .005; ANGULAR ∠ ± 1°		SIZE B; DWG NO OSP-STRUT-60CELL-2X5 - XHD; REV 02
		SCALE 1:30; SHEET 5 OF 10

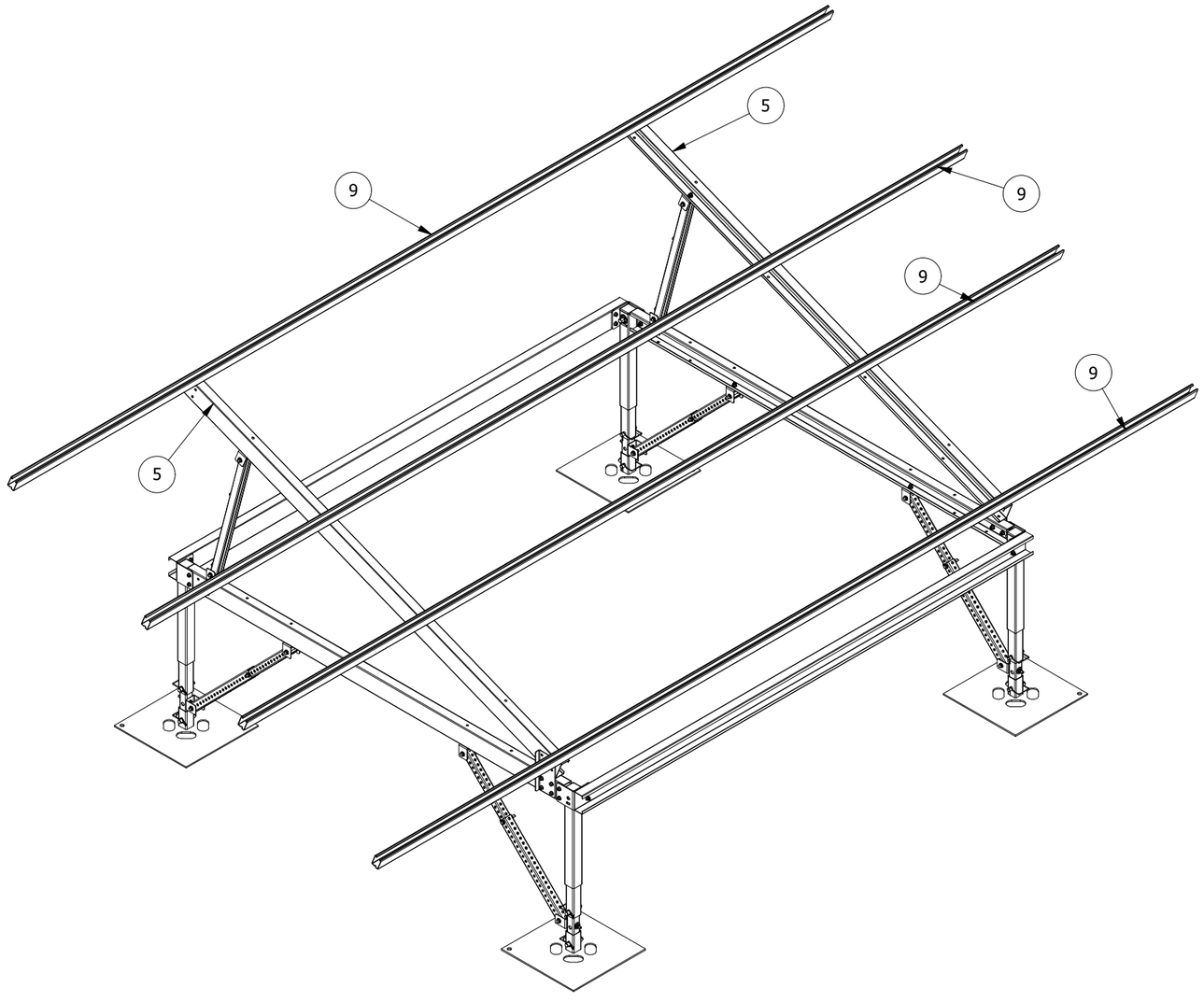

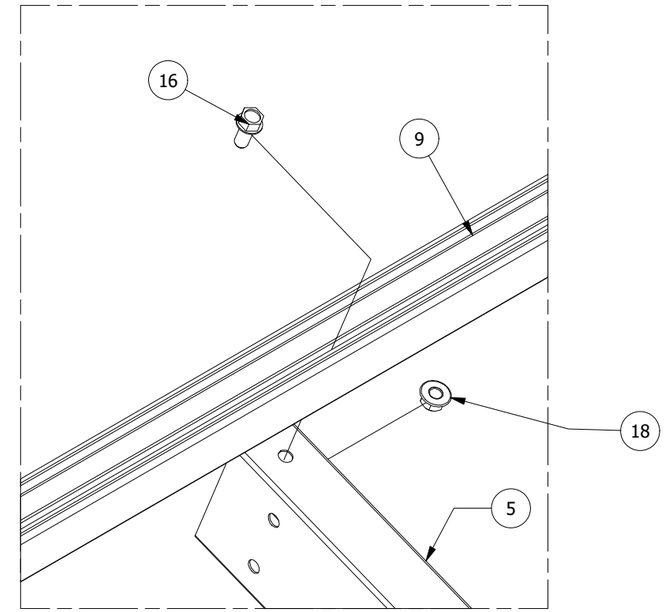

STAMP & SIGNATURE:

ENGINEERED POWER SOLUTIONS
1405 Spring Street, Suite 204
Paso Robles, CA 93446

FOR STRUCTURAL ELEMENTS ONLY

OSPREY POWERPLATFORM

NUANCE ENERGY
Revolutionary Solar Racking Structures

PROPRIETARY AND CONFIDENTIAL: THE INFORMATION CONTAINED HERE IN IS THE SOLE PROPERTY OF NUANCE ENERGY GROUP. INC. ANY REPRODUCTION IN PART OR WHOLE WITHOUT WRITTEN PERMISSIONIS PROHIBITED. (C) COPYRIGHT 2013. ALL RIGHTS RESERVED.

MACHINED FILLET RADII 0.38-1.27 [.015-.050]. BREAK ALL SHARP EDGES 0.2-0.8 [.01-.03] RADII OR 45°. SURFACE FINISH IN MICRO (P) INCHES (Ra). INTERPRET DRAWING PER ASME Y14.5, ASME Y14.36, AND AWS A2.4 STANDARDS.

DRAW: RODOLFO PEREIRA	03/25/2020	OSPREY POWERPLATFORM
APPROVED: LUKE ASHWORTH	03/25/2020	TITLE: Osprey PowerPlatform Portrait 2x5, Strut - 60 Cell - XHD
WEIGHT: N/A lb		
GENERAL TOLERANCES: DECIMALS .X ± .1, .XX ± .01, .XXX ± .005; ANGULAR ∠ ± 1°		MATERIAL: N/A
		SIZE B; DWG NO OSP-STRUT-60CELL-2X5 - XHD; REV 02
		SCALE 1:25; SHEET 6 OF 10

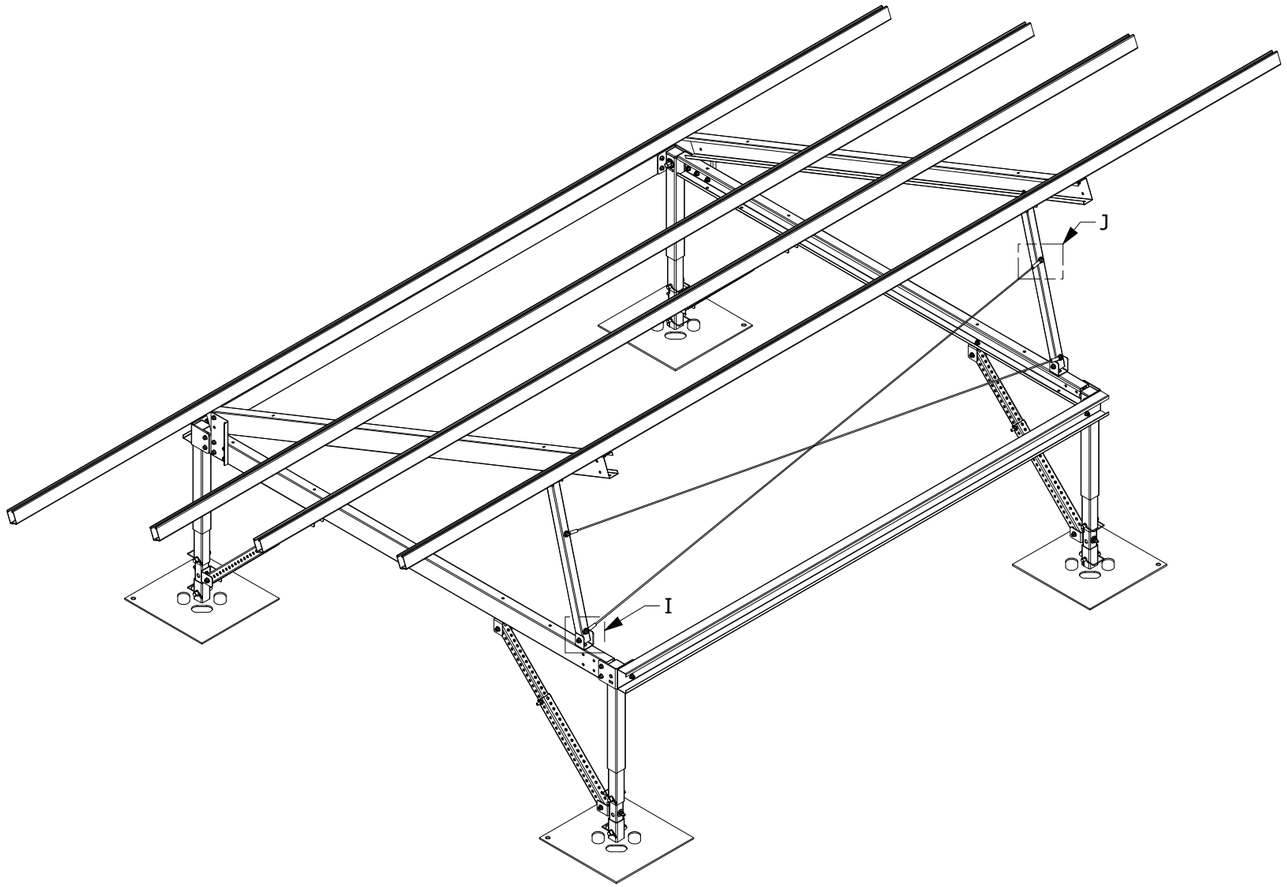

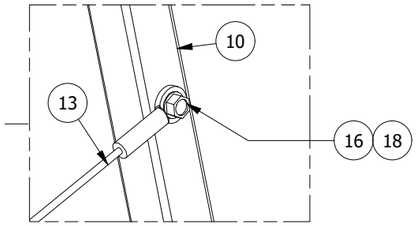

DETAIL J
SCALE 1:4

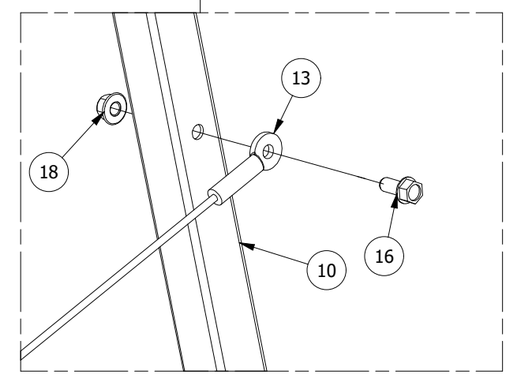

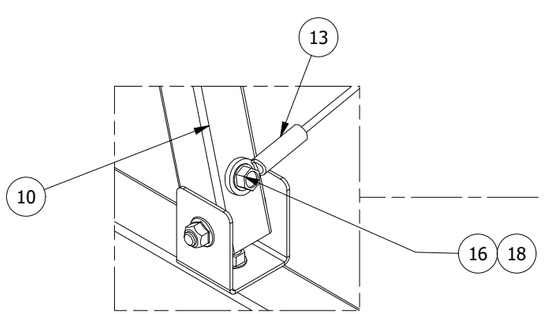

DETAIL I
SCALE 1:4

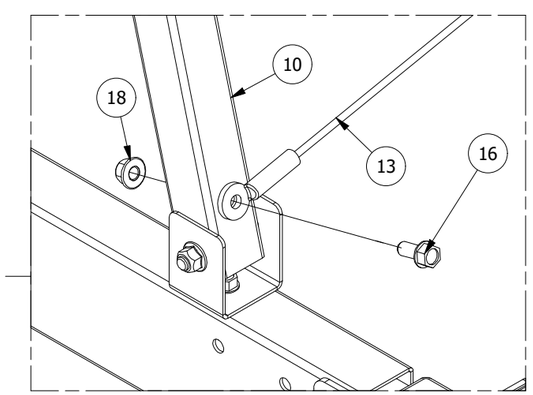

CABLE BRACE MOUNTING (CORNERS)

STAMP & SIGNATURE:

ENGINEERED POWER SOLUTIONS
1405 Spring Street, Suite 204
Paso Robles, CA 93446

FOR STRUCTURAL ELEMENTS ONLY

OSPREY POWERPLATFORM

NUANCE ENERGY
Revolutionary Solar Racking Structures

PROPRIETARY AND CONFIDENTIAL: THE INFORMATION CONTAINED HERE IN IS THE SOLE PROPERTY OF NUANCE ENERGY GROUP. INC. ANY REPRODUCTION IN PART OR WHOLE WITHOUT WRITTEN PERMISSIONIS PROHIBITED. (C) COPYRIGHT 2013. ALL RIGHTS RESERVED.

MACHINED FILLET RADII 0.38-1.27 [.015-.050]. BREAK ALL SHARP EDGES 0.2-0.8 [.01-.03] RADII OR 45°. SURFACE FINISH IN MICRO (P) INCHES (Ra). INTERPRET DRAWING PER ASME Y14.5, ASME Y14.36, AND AWS A2.4 STANDARDS.

DRAW: RODOLFO PEREIRA	03/25/2020	OSPREY POWERPLATFORM
APPROVED: LUKE ASHWORTH	03/25/2020	TITLE: Osprey PowerPlatform Portrait 2x5, Strut - 60 Cell - XHD
WEIGHT: N/A lb		MATERIAL: N/A
GENERAL TOLERANCES: DECIMALS .X ± .1, .XX ± .01, .XXX ± .005 / ANGULAR ∠ ± 1°		SIZE B / DWG NO OSP-STRUT-60CELL-2X5 - XHD / REV 02
		SCALE 1:25 / SHEET 7 OF 10

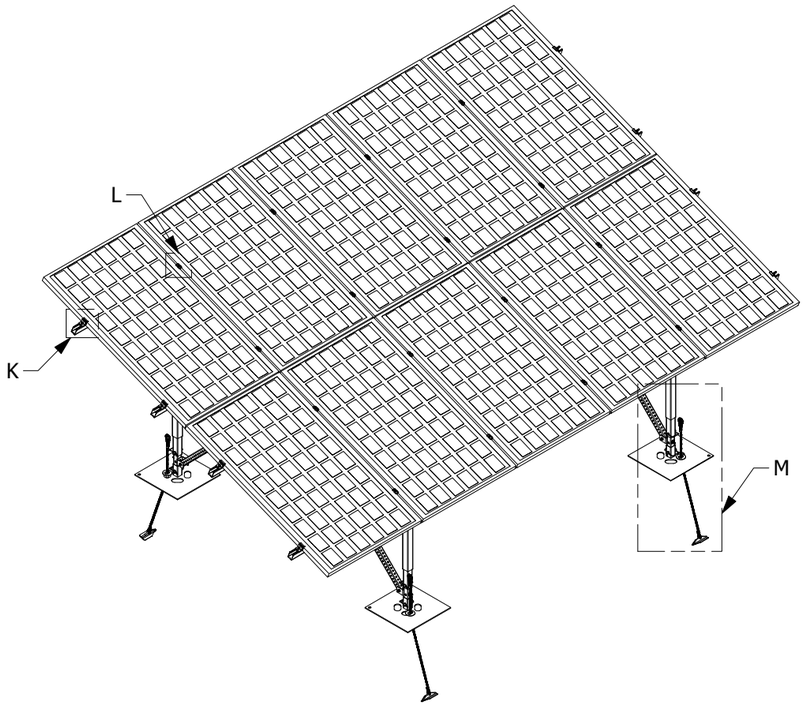

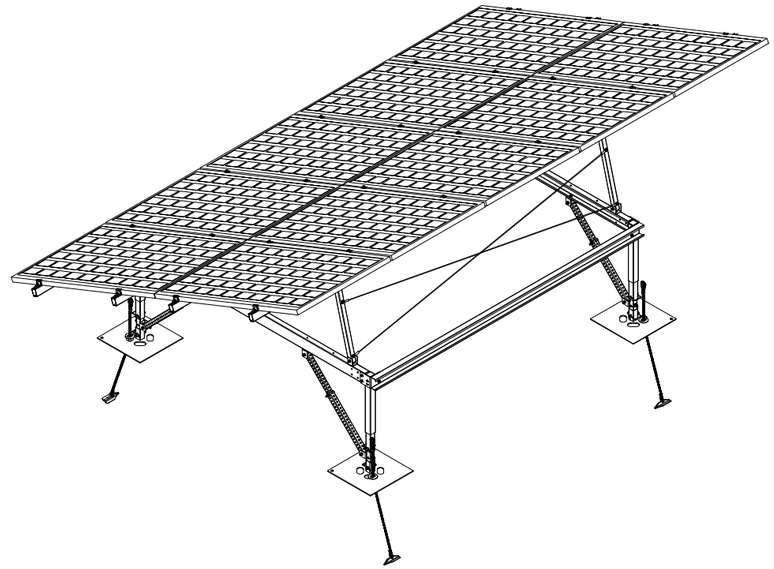

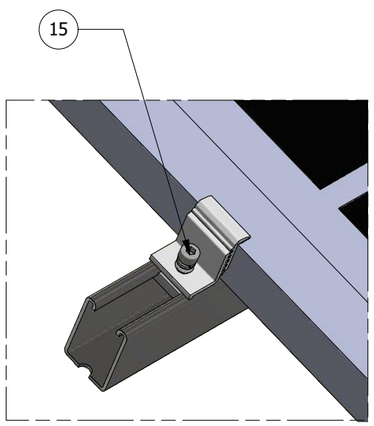

DETAIL K
SCALE 1:4

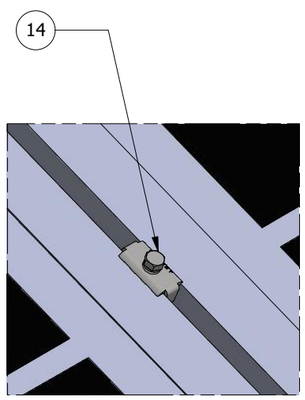

DETAIL L
SCALE 1:4

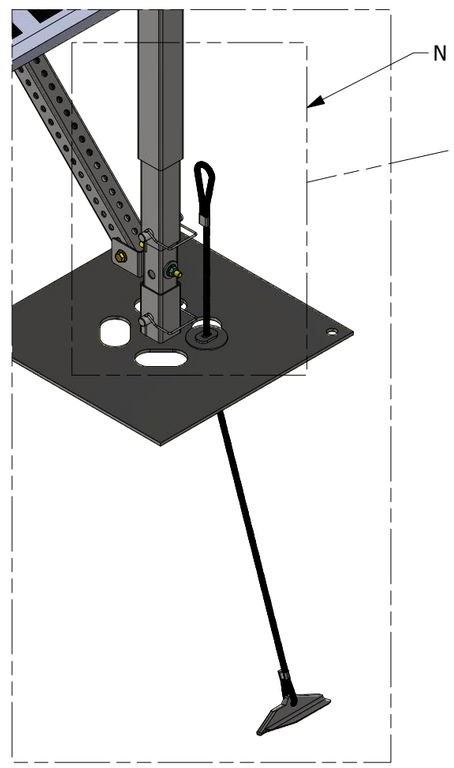

DETAIL M (Typ. 6x - 180º)
SCALE 1:10

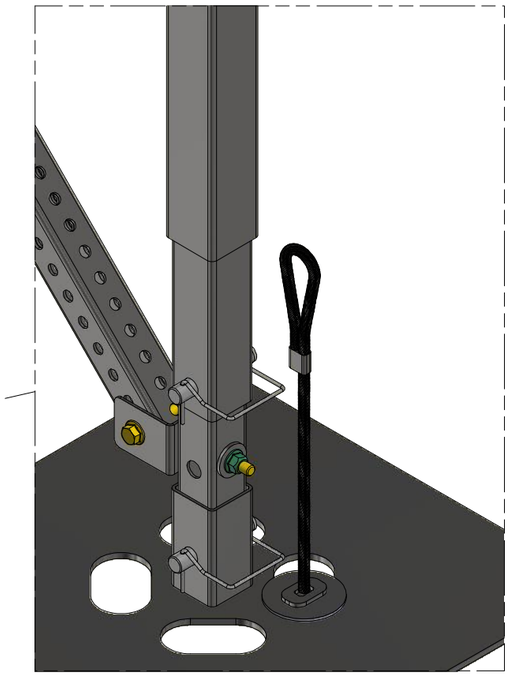

DETAIL N (ANCHOR DETAIL)
SCALE 1:5

STAMP & SIGNATURE:

ENGINEERED POWER SOLUTIONS
1405 Spring Street, Suite 204
Paso Robles, CA 93446

FOR STRUCTURAL ELEMENTS ONLY

OSPREY POWERPLATFORM

NUANCE ENERGY
Revolutionary Solar Racking Structures

PROPRIETARY AND CONFIDENTIAL: THE INFORMATION CONTAINED HERE IN IS THE SOLE PROPERTY OF NUANCE ENERGY GROUP. INC. ANY REPRODUCTION IN PART OR WHOLE WITHOUT WRITTEN PERMISSIONIS PROHIBITED. (C) COPYRIGHT 2013. ALL RIGHTS RESERVED.

MACHINED FILLET RADII 0.38-1.27 [.015-.050]. BREAK ALL SHARP EDGES 0.2-0.8 [.01-.03] RADII OR 45°. SURFACE FINISH IN MICRO (P) INCHES (Ra). INTERPRET DRAWING PER ASME Y14.5, ASME Y14.36, AND AWS A2.4 STANDARDS.

DRAW: RODOLFO PEREIRA	03/25/2020	OSPREY POWERPLATFORM
APPROVED: LUKE ASHWORTH	03/25/2020	TITLE: Osprey PowerPlatform Portrait 2x5, Strut - 60 Cell - XHD
WEIGHT: N/A lb		MATERIAL: N/A
GENERAL TOLERANCES: DECIMALS .X ± .1, .XX ± .01, .XXX ± .005 / ANGULAR ∠ ± 1°		SIZE B / DWG NO OSP-STRUT-60CELL-2X5 - XHD / REV 02
		SCALE 1:45 / SHEET 8 OF 10

(THERMAL EXPANSION GAP NEEDED AFTER 5 OSPREY CONNECTED TOGETHER)

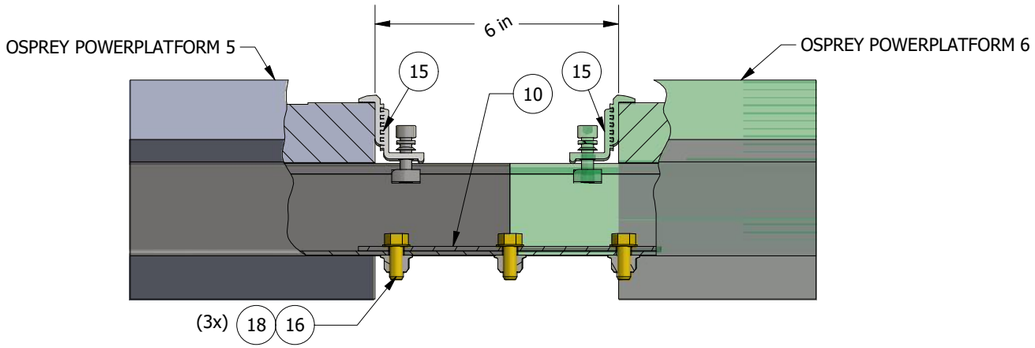

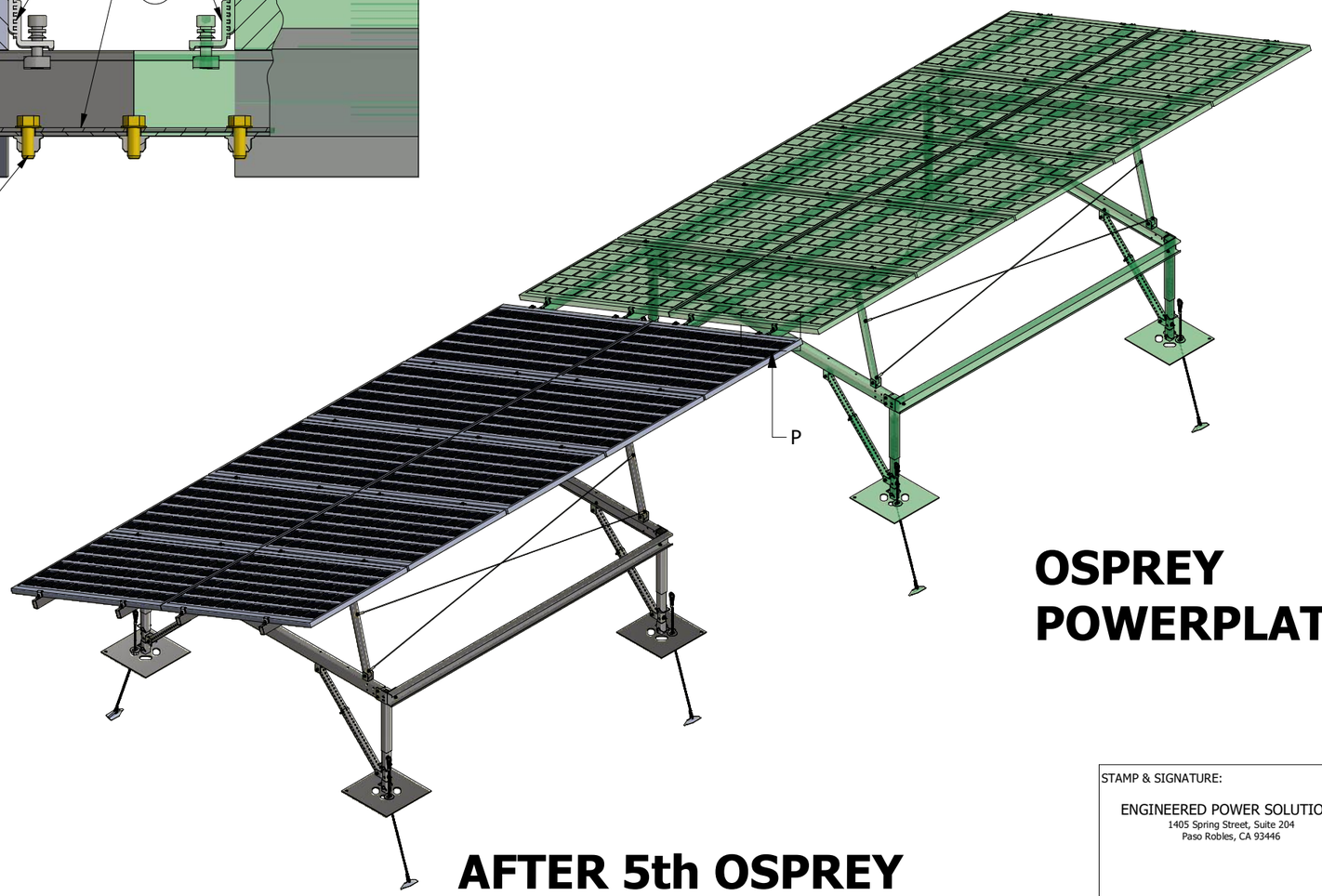

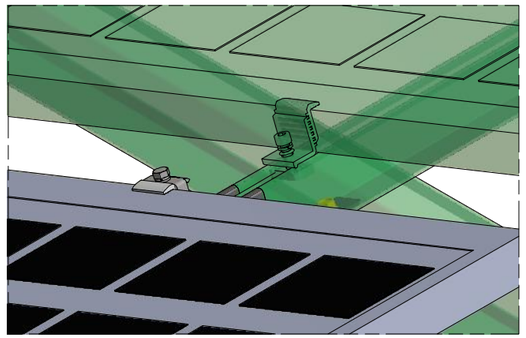

DETAIL P
SCALE 1:5

OSPREY POWERPLATFORM 6

AFTER 5th OSPREY POWERPLATFORM CREATE EXPANSION GAP

STAMP & SIGNATURE:

ENGINEERED POWER SOLUTIONS
1405 Spring Street, Suite 204
Paso Robles, CA 93446

FOR STRUCTURAL ELEMENTS ONLY

OSPREY POWERPLATFORM

NUANCE ENERGY
Revolutionary Solar Racking Structures

PROPRIETARY AND CONFIDENTIAL: THE INFORMATION CONTAINED HERE IN IS THE SOLE PROPERTY OF NUANCE ENERGY GROUP. INC. ANY REPRODUCTION IN PART OR WHOLE WITHOUT WRITTEN PERMISSIONIS PROHIBITED. (C) COPYRIGHT 2013. ALL RIGHTS RESERVED.

MACHINED FILLET RADII 0.38-1.27 [.015-.050]. BREAK ALL SHARP EDGES 0.2-0.8 [.01-.03] RADII OR 45°. SURFACE FINISH IN MICRO (P) INCHES (Ra). INTERPRET DRAWING PER ASME Y14.5, ASME Y14.36, AND AWS A2.4 STANDARDS.

DRAW: RODOLFO PEREIRA	03/25/2020	OSPREY POWERPLATFORM
APPROVED: LUKE ASHWORTH	03/25/2020	TITLE: Osprey PowerPlatform Portrait 2x5, Strut - 60 Cell - XHD
WEIGHT: N/A lb		MATERIAL: N/A
GENERAL TOLERANCES: DECIMALS .X ± .1, .XX ± .01, .XXX ± .005; ANGULAR ∠ ± 1°		SIZE B; DWG NO OSP-STRUT-60CELL-2X5 - XHD; REV 02
		SCALE 1:40; SHEET 9 OF 10

(THERMAL EXPANSION GAP NEEDED CONNECTED TOGETHER)

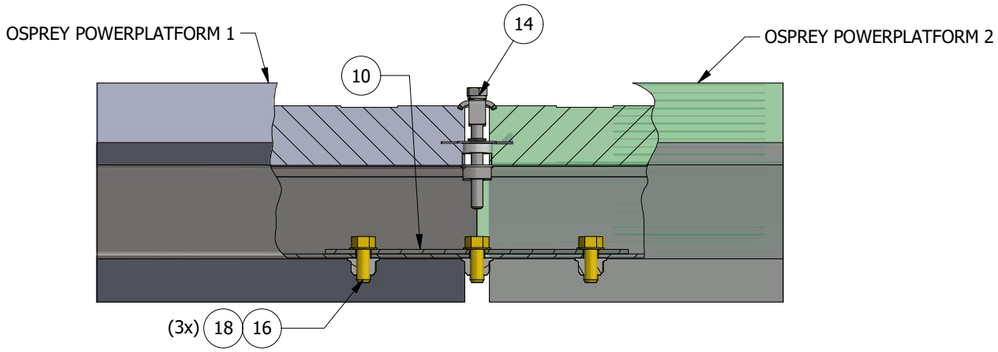

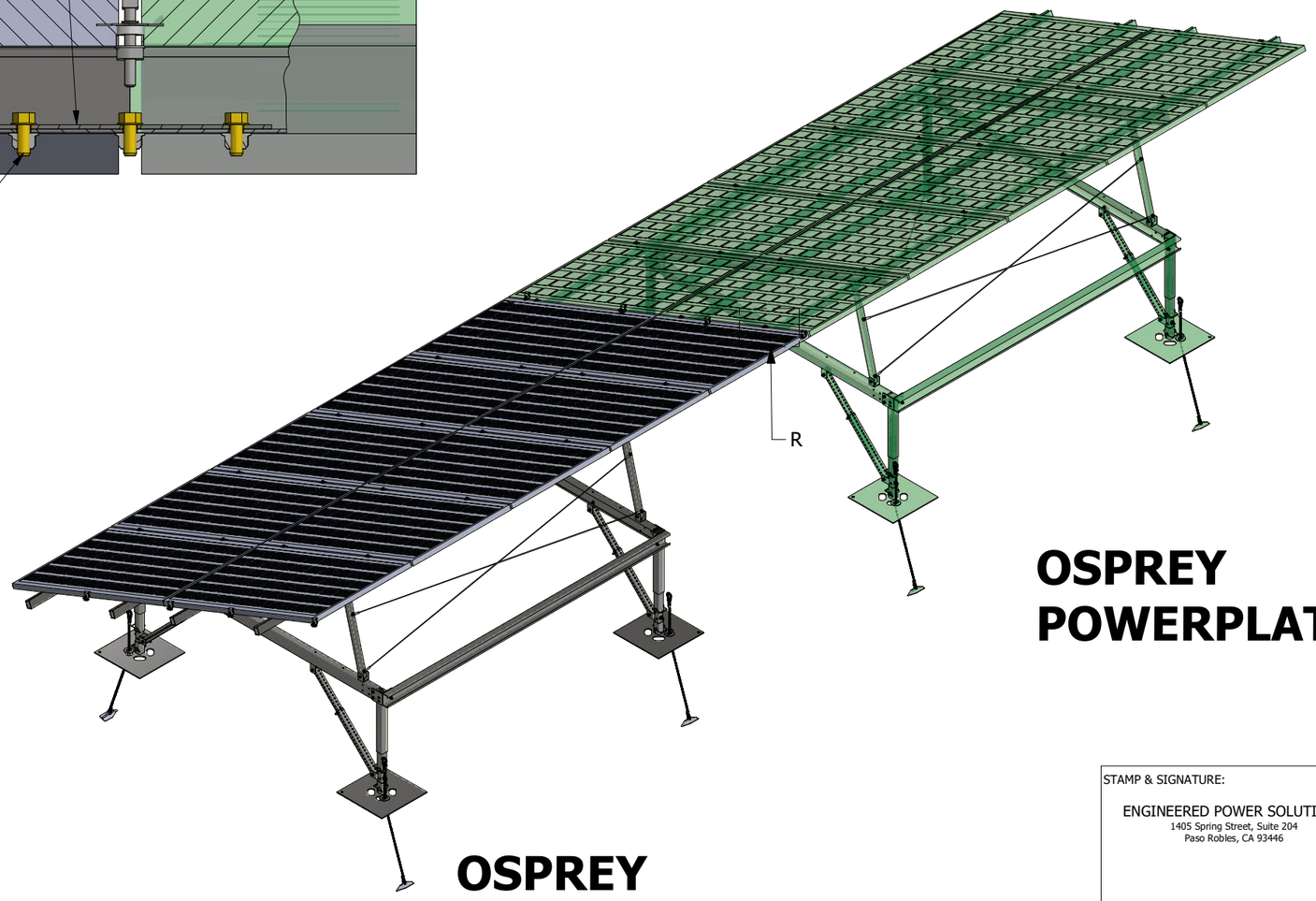

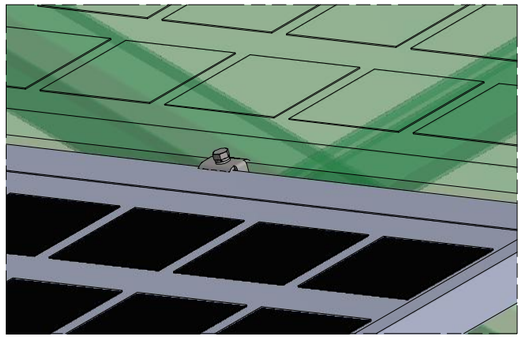

DETAIL R
SCALE 1:5

OSPREY POWERPLATFORM 2

OSPREY POWERPLATFORM 1

STAMP & SIGNATURE:

ENGINEERED POWER SOLUTIONS
1405 Spring Street, Suite 204
Paso Robles, CA 93446

FOR STRUCTURAL ELEMENTS ONLY

OSPREY POWERPLATFORM

NUANCE ENERGY
Revolutionary Solar Racking Structures

PROPRIETARY AND CONFIDENTIAL: THE INFORMATION CONTAINED HERE IN IS THE SOLE PROPERTY OF NUANCE ENERGY GROUP. INC. ANY REPRODUCTION IN PART OR WHOLE WITHOUT WRITTEN PERMISSIONIS PROHIBITED. (C) COPYRIGHT 2013. ALL RIGHTS RESERVED.

MACHINED FILLET RADII 0.38-1.27 [.015-.050]. BREAK ALL SHARP EDGES 0.2-0.8 [.01-.03] RADII OR 45°. SURFACE FINISH IN MICRO (P) INCHES (Ra). INTERPRET DRAWING PER ASME Y14.5, ASME Y14.36, AND AWS A2.4 STANDARDS.

DRAW: RODOLFO PEREIRA	03/25/2020	OSPREY POWERPLATFORM
APPROVED: LUKE ASHWORTH	03/25/2020	TITLE: Osprey PowerPlatform Portrait 2x5, Strut - 60 Cell - XHD
WEIGHT: N/A lb		MATERIAL: N/A
GENERAL TOLERANCES: DECIMALS .X ± .1, .XX ± .01, .XXX ± .005; ANGULAR ∠ ± 1°		SIZE B; DWG NO OSP-STRUT-60CELL-2X5 - XHD; REV 02; SCALE 1:40; SHEET 10 OF 10